GRAVINER
MK6 OIL MIST DETECTOR

INSTALLATION, OPERATION AND MAINTENANCE MANUAL

1-59812-K001

PROPRIETY RIGHTS NOTICE

The information contained in this manual is the property of UTC Limited and may not be reproduced or transmitted in any form or by any means, electronic, mechanical, photocopying, recording or otherwise, nor stored in any retrieval system or any nature without the express written authority of UTC Limited.

© Copyright 2009 United Technologies Corporation

TABLE OF CONTENTS

Chapter		Page
Chapter 1	DESCRIPTION AND OPERATION	1
1.1	INTRODUCTION	1
1.2	DESCRIPTION	2
1.3	TECHNICAL SPECIFICATION	3
1.4	OPERATION	5
1.5	SYSTEM CONTROLS AND DISPLAYS	5
Chapter 2	INSTALLATION AND COMMISSIONING	10
2.1	INSTALLATION	10
2.2	CONNECTING THE SYSTEM	21
2.3	SYSTEM CHECKS PRIOR TO SWITCHING ON	35
2.4	SYSTEM CONFIGURATION AND COMMISSIONING	37
2.5	SYSTEM OPERATION	42
2.6	TEST MENU	44
2.7	EVENT LOG	49
ENGINEER & USER MENU FLOWCHARTS		53
Chapter 3	MAINTENANCE	62
3.1	ROUTINE MAINTENANCE	62
3.2	DETECTOR HEAD REPLACEMENT	63
3.3	DETECTOR HEAD REFURBISHMENT	64
3.4	FAN REPLACEMENT	66
3.5	CABLE REPLACEMENT	67
3.6	CONTROL UNIT PCBs	68
3.7	REPLACEMENT OF 8 ENGINE STATUS DISPLAY MEMBRANE	70
3.8	REPLACEMENT OF LCD DISPLAY	70
3.9	REPLACEMENT OF FUNCTION KEY / LCD DISPLAY MEMBRANE	71
3.10	REPLACEMENT OF JUNCTION BOX PCB	71
3.11	DECOMMISSIONING	71
Chapter 4	FAULT FINDING	76
4.1	GENERAL	76
Chapter 5	SPARE PARTS	97

LIST OF ILLUSTRATIONS

Figure	Title	Page
Figure 1	Areas of Failure – 2 Stroke Engine	1
Figure 2	Areas of Failure – 4 Stroke Engine	1
Figure 3	Graviner MK6 OMD Components	2
Figure 4	Typical System Configuration	3
Figure 5	Control Unit Display	7
Figure 6	Relay Function Modes	9
Figure 7	MK6 Control Unit Bulkhead Mounting (1-53836-K170) Installation Drawing	10
Figure 8	MK6 Control Unit Flush Mounting (1-53836-K206) Installation Drawing	11
Figure 9	Bezel - Part Number 1-35100-K187	12
Figure 10	MK6 Control Unit Flush Mounting Installation Drawing Cut Out Details	12
Figure 11	Junction Box Installation	14
Figure 12	Junction Box External Connections	15
Figure 13	Ideal Mounting Position	16
Figure 14	Typical Installation	16
Figure 15	MK6 OMD Detector Head Installation 1-E3561-301	17
Figure 16	MK6 Detector Head Installation (Short sample pipe) (1-E3561-301-01)	18
Figure 17	Detector Cable Assembly (Straight Connector)	19
Figure 18	Detector Cable Assembly (Right Angle Connector)	20
Figure 19	(Sheet 1 of 3): MK6 OMD System Part Number 1-E9261-002	21
Figure 20	(Sheet 2 of 3): MK6 OMD System Part Number 1-E9261-002	22
Figure 21	(Sheet 3 of 3): MK6 OMD System Part Number 1-E9261-002	23
Figure 22	Power cable	24
Figure 23	Power cable through EMC gland	24
Figure 24	Power Input Cable Earth Stud	25
Figure 25	Power connections	25
Figure 26	Control Unit relay cable assembly	26
Figure 27	Cable Gland Isolation	27
Figure 28	Cable Gland Isolation	27
Figure 29	Cable Gland Isolation	28
Figure 30	Power cable connections to Interface Board.	28
Figure 31	Communications cable connections to Interface Board	29
Figure 32	Power cable Screen Tail.	29
Figure 33	Power cable Screen Tail Insulation.	30
Figure 34	Junction Box Power cable & Communications terminal connections.	30
Figure 35	MK6 Junction Box Connections	31
Figure 36	Detector Cable Assembly (Straight Connector)	32
Figure 37	Detector Cable Assembly (Right Angle Connector)	33
Figure 38	Detector cable, stripped.	33
Figure 39	Detector cable, EMC Gland assembly	33
Figure 40	Detector cable, EMC Gland & Junction Box	34
Figure 41	Close-up of Detector cable, EMC Gland assembly	34
Figure 42	Connection to the Detector Head Assembly.	35
Figure 43	Detector Head 1-E3561-301	36
Figure 44	Smoke Tester	39
Figure 45	Smoke Test	40
Figure 46	Connection Description Screen	50
Figure 47	COM1 Properties Screen	50

Figure 48	HyperTerminal Screen	51
Figure 49	Event Log Connector location	52
Figure 50	Base Fixing Screw Removal	63
Figure 51	Cable Disconnect	64
Figure 52	Screw Removal	64
Figure 53	Base Moulding Seal	65
Figure 54	Pulling Tool	65
Figure 55	Fan Removal	65
Figure 56	Cleaning Light Guide Removal	66
Figure 57	Control Unit PCB’s	69
Figure 58	Control Unit PCB’s	70
Figure 59	Interface PCB	72
Figure 60	Main Control Processor PCB	73
Figure 61	Eight Engine Status Display PCB	74
Figure 62	Status Display PCB	74
Figure 63	Junction Box PCB	75
Figure 64	Junction Box Assembly – Part Number 1-D4720-001-XX	97
Figure 65	Detector Head - Part Number 1-E3561-301	98
Figure 66	Graviner MK6 OMD Control Unit	99

REVISION HISTORY

Revision	Date	Details
1	June 08	Original.
2	July 08	Additional fault descriptions added.
3	July 09	Modified to reflect changes to terminations.
4	Oct 11	Removed Plug & Play part numbers.
5	July 13	Addition of Photos showing 2 screw Fan Connector.
6	May 16	Addition of Green Label Detector. Addition of Gas canister smoke test. Figure 20 & 21 Graviner MK6 OMD System wiring colours Part numbers prefix “1-“
7	Sept 17	Part number 1-2888-K073 added.
8	Jan 18	Part number 1-43682-K037 changed to 1-43682-K261.

Oil Mist Detector Warranties

1. United Technologies Corporation (UTC) warrants, for a period of 3 years from the handover of the Oil Mist Detector (OMD) system to the system owner, that any component forming part of the original OMD system manufactured by or supplied by UTC shall be free from defects in workmanship or materials during normal usage (the “OMD System Warranty”).

   If any such component does not conform to this warranty UTC will, at its sole discretion and its cost, either repair or replace such component. Installation of the repaired / replacement parts is not covered under the OMD System Warranty. Components replaced or repaired under the terms of the OMD System Warranty shall continue to have the benefit of the unexpired portion of the OMD System Warranty, unless that unexpired portion is less than 12 months, in which case the repaired / replacement parts shall have the benefit of a 12 month warranty against defects in workmanship or materials during normal usage starting on the date of delivery. OMD’s supplied as spares shall be warranted in accordance with paragraph 2 below only.

2. UTC warrants for a period of 12 months from delivery that individual OMD’s supplied as spares shall be free from defects in workmanship or materials during normal usage.

3. Performance of UTC’s repair or replacement obligations shall constitute an entire discharge of UTC's liability under the warranties set out in paragraphs 1 and 2 above (“Warranties”).

4. The Warranties shall not apply to the following:

   a. Defects reasonably judged by UTC as being caused by the improper installation of the OMD’s and/or OMD system;

   b. Defects reasonably judged by UTC as being caused by the failure to follow the recommendations contained in UTC’s product manuals and/or other documentation regarding the frequency of routine maintenance and testing of the OMD’s and/or OMD system and/or the failure to have such routine maintenance performed;

   c. Defects which are attributable to careless handling or storage, accident, improper use of the OMD’s and/or OMD system, or incorrectly completed repairs or routine maintenance services;

   d. Damages or losses occurring as a result of any act or omission which is wilfully unlawful or negligent;

   e. Defects arising from the use of non-genuine UTC parts or accessories, or the use of materials not approved for use by UTC;

   f. Any modifications to or installations performed on the OMD’s and/or OMD system outside the scope of normal routine maintenance or running repairs without the express prior written approval of UTC;

   g. Deterioration, staining or corrosion of parts which will occur due to normal exposure and usage;

   h. Alleged defects not materially affecting the quality or proper functioning of the OMD system.

5. In addition the Warranties shall be limited as follows:

   a. UTC shall be under no liability in respect of any defect in the OMD’s and/or OMD System arising from any drawing, design or specification supplied by or at the request of the buyer or system owner (not being a drawing, design or specification of UTC);

b. UTC shall be under no liability in respect of any defect or failure of the OMD's and/or OMD System to operate in accordance with specifications, illustrations, descriptions or other particulars due to their combination or use with any incompatible equipment or product.

6. The Warranties are conditional upon:

   a. The buyer or OMD system owner giving written notice to UTC of the alleged defect, such notice to be given immediately when the buyer or OMD system owner discovers or ought to have discovered the defect;

   b. The buyer or OMD system owner affording UTC a reasonable opportunity to inspect the OMD's and/or OMD system;

   c. The buyer or OMD system owner not altering or attempting to repair the OMD's and/or OMD system without the written consent of UTC.

7. The Warranties can be transferred to any new owner of the OMD system provided UTC is informed in writing within 30 days of the transfer. The OMD System Warranty cannot be transferred to another UTC OMD system.

8. Save to the extent amended by the provisions set out above, KPL's standard terms and conditions of sale shall apply.

OMD Service Life

Oil Mist Detectors (OMD's) are an integral part of critical safety systems designed to detect certain conditions that could lead to crankcase explosions on large Diesel engines. They are typically installed in harsh operating conditions - particularly with respect to temperature and vibration - and are expected to provide continuous service over extended periods. They are therefore subject to considerable wear and tear.

In order to ensure reliable performance, it is particularly important that OMD's are properly installed, operated and maintained in accordance with the manufacturer's instructions and guidelines. Given that they are components within key safety systems, as precautionary advice the manufacturer recommends replacing or refurbishing OMD's which are more than 10 years old, even if they are functioning correctly at that time.

Chapter 1 DESCRIPTION AND OPERATION

1.1 INTRODUCTION

High temperatures, in excess of 200°C that occur on bearing surfaces under initial failure conditions, can lead to a rapid generation of oil vapour When the hot vapour contacts the relatively cooler atmosphere of the crankcase it condenses into a fine mist, with typical particle sizes of around 0.5 to 5 microns in diameter. When the density of these particles reaches between 30 to 50 mg/l (Milligrams per litre), depending upon the type of oil, an explosive condition exists.

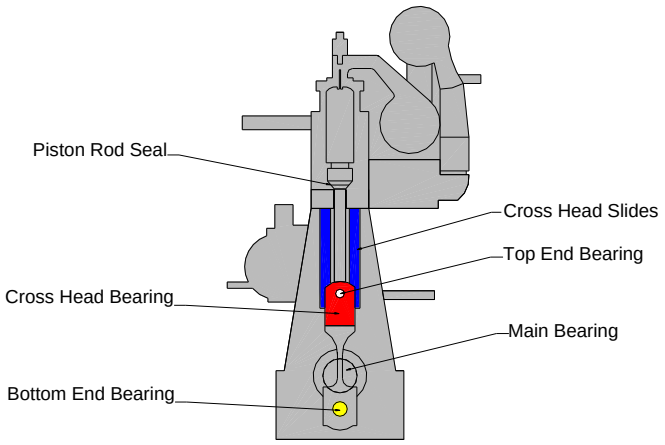

Figure 1 Areas of Failure – 2 Stroke Engine

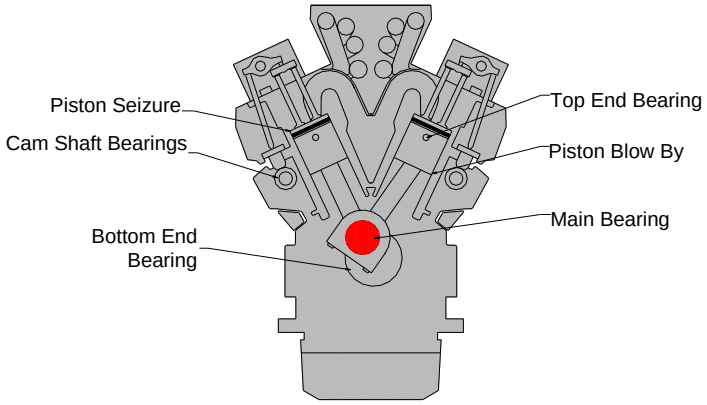

Figure 2 Areas of Failure – 4 Stroke Engine

A fire or explosion needs three constituents: fuel, oxygen and an ignition source. Remove one of these and no explosion will occur. Similarly, within the crankcase, the three constituents which could cause an explosion are air, oil mist and an ignition source, the “hot spot’. Using optical measuring techniques, oil mist density can be measured at levels as low as 0.05 mg/l and give early warning of a rise in oil mist density.

Oil Mist Detection (OMD) techniques have been used to monitor diesel engine crankcases for potential explosive conditions and early detection of bearing failures. The systems available rely mainly on analysing the optical density of oil mist samples drawn from the crankcase compartments, through pipes to the Detector. While these systems proved successful in the

past, engine design has improved significantly over the years and oil mist detection techniques have improved substantially to maintain adequate protection.

The Graviner MK6 OMD provides the following benefits:

Multi engine capability up to 8 engines on a single system

Suitable for both 2 stroke and 4 stroke engines.

Elimination of sample pipes - reduced installation costs.

Significant reduction in scanning time - 1 .2 seconds for a system of 64 Detectors.

Relocating system controls and display to the safety and comfort of control room.

1.2 DESCRIPTION

The system comprises three main components (refer to Figure 3):

Detectors	1-E3561-301 (with base)
	1-D5622-001 (replacement head only)
Engine Junction Boxes	1-D4720-001-XX with 20mm Power & Comms Connections
	or
	1-53836-K224-XX with 25mm Power & Comms Connections
Control Panel	1-53836-K170 (Bulkhead Mounting)
	1-53836-K206 (Flush mount)

And connecting cables

Junction Box to Detector cable (Straight)	1-43682-K108-XX
Junction Box to Detector cable (Right Angle)	1-43682-K109-XX

Figure 3 Graviner MK6 OMD Components

The Graviner MK6 OMD system can comprise up to 64 Detectors directly mounted on the crankcases of up to 8 engines, allowing both main propulsion and auxiliary generators to be monitored at the same time.

Each Detector communicates electronically over a serial data link via the engine mounted Junction Box with the Control Unit which is designed to be mounted within the Engine Control Room. This eliminates the need to enter the machinery space in alarm conditions.

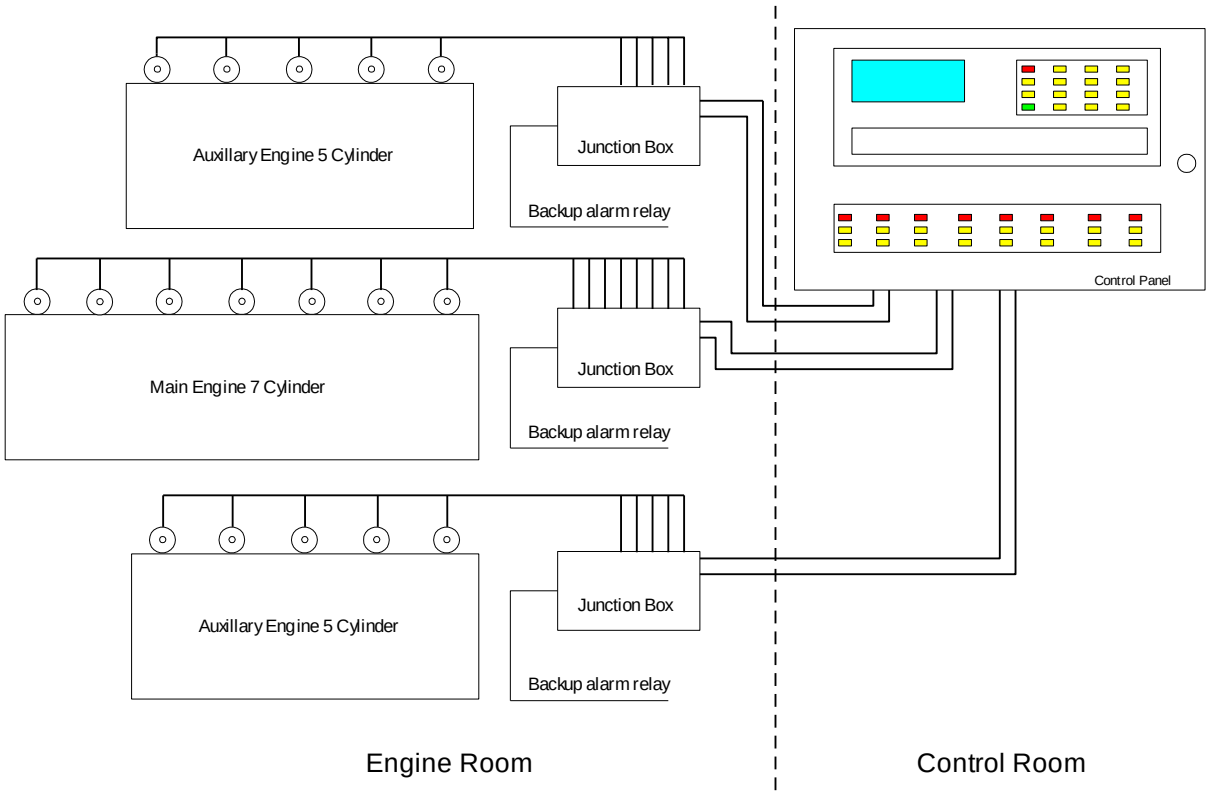

Figure 4 Typical System Configuration

1.3 TECHNICAL SPECIFICATION

Detector

Mounting	¾ inch BSP	
Enclosure Rating	IP65	
Address Switch	2 x 10 position (0 to 99)	
Indicators	Green	Detector On
	Red	Alarm
	Amber	Detector Fault
Power Consumption	2.8W	
Temperature Rating	0 – 70°C	
Height	175mm	
Width	90mm	
Length	205mm	
Weight	0.6kg	

Junction Box

Enclosure Rating	IP65	
Max detector inputs	14	
Fuse Rating	4A 20mm slow blow	
Back-up alarm relay	Volt-free change over contacts rated at 30Vdc 1A	
Power Consumption	100mW	
Temperature Rating	0 – 70°C	
Dimensions		
Height	186mm	(110mm mounting centres)
Width	318mm	(240mm mounting centres)
Depth	90mm	
Weight	2.7kg	

Control Unit

Enclosure Rating	IP32	
Scanning lime	1.2 seconds for 64 Detectors	
Max No. of Detectors	64	
Max No. of engines monitored	8	
Power Supply	2 x 24Vdc (+30% -25%)	
Protection	2 x 2.5A self re-settable fuses inside Control Unit	
Insulation	Flash tested to 2000V for 1 minute	
Power Consumption	5.2W	
Temp Rating	0 – 55°C	
Humidity level	95%	
Dimensions		
Bulkhead Mounted:	Height	313mm (270mm mounting centres)
	Width	500mm (445mm mounting centres)
	Depth	118mm
Panel Mounted:	Height	309mm
	Width	559mm
	Depth	118.5mm
	Weight	8.7kg
System Outputs:	Volt-free change over contacts rated at 30Vdc 1A	
Main Alarm	1 set (energised during normal operation)	
Fault Alarm	1 set (energised during normal operation)	
Engine Slowdown / Shutdown	8 sets, 1 set per engine (de-energised during normal operation)	
Alarm Ranges	Average 0.3mg/l to 1.3mg/l (adjustable)	
	Deviation 0.05mg/l to 0.5mg/l (adjustable)	
	Backup 1.6mg/l (fixed)	

1.4 OPERATION

The Graviner MK6 OMD retains the long established differential measuring system unique to UTC Fire & Security Limited, which enables high sensitivity to be used while maintaining the maximum false alarm rejection. It still uses optical sensing, but light scatter instead of obscuration. This enables very small Detectors to be used. These are rugged and designed to be engine mounted using standard oil mist detector ports. As they each have their own means of sample acquisition no sample pipes are required. Multiple internal light sources ensure that a single failure will not cause the loss of a Detector. Modular construction means that a faulty Detector can be replaced in a matter of minutes.

Each Detector continually monitors the oil mist density in the crankspace to which it is connected. In addition, it self-checks for any internal faults. The Control Unit interrogates each Detector in turn, notes its address, the oil mist density value and determines the health of the Detector.

For each engine the average oil mist density from each Detector is calculated and stored. Each Detector signal is then compared in turn with the stored average. A positive difference (the deviation) is then compared with a pre-set, but adjustable reference (the deviation alarm level) for that engine (or Detector). If it is greater than the reference a deviation alarm is indicated.

The stored average level is also compared with a preset reference (the average alarm level) and an average alarm is indicated if the reference is exceeded.

A full system of 64 Detectors over 8 engines has a maximum scan time of 1.2 seconds, but with alarm priorities that enable the system to respond if an alarm occurs.

The Control Unit separates the information according to engine groups.

The Control Unit incorporates a Liquid Crystal Display (LCD). The Main Display constantly displays the average oil mist density reading for each engine along with the average alarm level for each engine. It also enables the individual readings of each Detector on an engine and the average to be displayed on demand and automatically under alarm conditions.

In the interest of safety, all system controls and alarm displays are located on the Control Unit. However to aid fault finding each Detector is fitted with 3 indicator lights:

Green	-	Power on
Red	-	Alarm
Amber	-	Fault

Each Detector also has an access to its address set switches.

As all Detectors operate independently, the loss of one by either failure or the need to clean does not affect the operation of the rest of the system. Individual Detectors, or engine groups, can be isolated from the rest of the system for maintenance while the rest of the system remains in operation.

1.5 SYSTEM CONTROLS AND DISPLAYS

The software is menu driven and provides a logical route to all functions. It has three operating levels:

User

Engineer

Service

The User level is essentially for read only interrogation and does not allow any adjustments to be made to alarm settings or system configuration.

The Engineer level is password protected and allows access to most functions and the full range of settings.

When selected, a prompt for a password will appear Enter 012345 then press the ↵ key.

The Service level is also password protected (different from the engineer menu) and allows access to all functions. This is only available to authorised UTC personnel and authorised service agents.

1.5.1 Controls

The Control Unit offers the following controls :-

- **THE ACCEPT KEY** resets the main alarm relay, silences the internal sounder. The display will then enter the individual display for the engine(s) in alarm. If there is more than one engine in alarm the display will scroll between engines.
- **THE RESET KEY** resets all alarms, faults and returns the system to normal.
- The **MAIN DISPLAY** key always returns the display to this page from anywhere in the software.
- The **ENGINE DISPLAY** control calls up the individual engine cylinder readings and the average. It also displays the deviation and average alarm settings. The cursor keys allow each engine in the system to be displayed in turn.
- **THE HOLD KEY** holds the display for 15 seconds.
- The **MAIN MENU** key allows access to all the **USER, ENGINEER** and **SERVICE** menus. At the bottom of each displayed page the active navigation keys for that page are shown.
- The **MAIN DISPLAY** and **MAIN MENU** keys allow fast return to the normal display or the main menu from anywhere in the software. If this function is carried out from a password protected area i.e. **ENGINEER** or **SERVICE** menu, then a **RESET** must also be carried out.
- **THE TEST KEY** enters the test menu at User level functions only.

The keypad keys are:

▼	Cursor down
▲	Cursor up
◄	Cursor left
►	Cursor right
←	Quit page
↵	Enter

Operation of the Cursor navigation keys is accompanied by an audio signal.

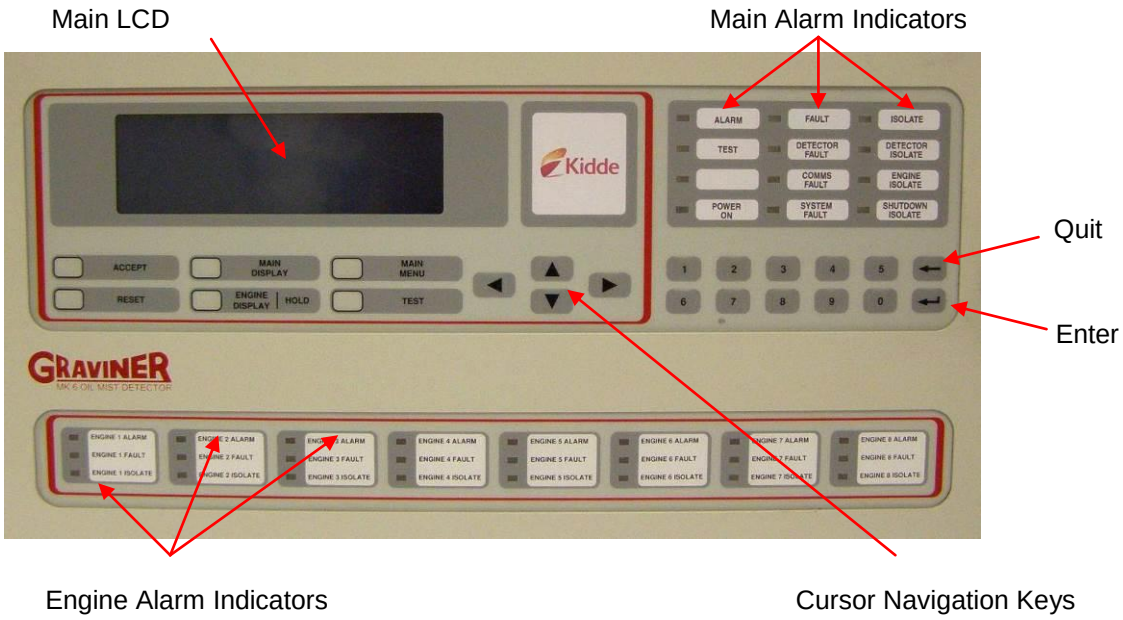

Figure 5 Control Unit Display

1.5.2 Main LCD

This provides visual access to all the data required to operate the system and displays the menu pages for system configuration and fault analysis. On the main display and the engine display, the left hand vertical scale shows oil mist density in mg/l. In addition the main display shows the average alarm setting for each engine.

On the engine display, both the deviation alarm(s) and the average alarm settings are displayed. Under normal operating conditions, the main display page shows the average oil mist density for all engines and the relevant average alarm settings. It also shows the time, the date and **NORMAL**.

1.5.3 Engine Alarm Indicators

Each of the eight engine alarm indicator sets show the status of that engine,

i.e. **ALARM**, **FAULT** and **ISOLATE**. This display is designed to be a backup to the main LCD.

1.5.4 Main Alarm Indicators

The light display consists of alarm indicators for all individual Alarm, Fault and Isolate conditions. Its function is to provide backup indication in the unlikely event of the loss of the main LCD display.

1.5.5 Alarm Outputs

The Control Unit has the following relay outputs:

- Main Alarm.
  1 set of volt free changeover contacts.
  Operate on any Average, Deviation or Back-up alarm from any of the 8 possible engines.
- Engine Slowdown / Shutdown Alarm.
  8 sets, 1 per engine.
  Operation when the correlating engine has either an Average alarm or Deviation Alarm.
- Fault Alarm.
  1 Set of volt free contacts.
  Operate on any system fault.

In addition each Junction Box has the following relay output:

- Backup Alarm Relay.
  1 set of volt free changeover contacts.
  Operate on a Back-up Alarm from any of the connected Detectors.

All relays are rated 30 V dc 1 Amp.

The Control Unit relays can be tested for operation in the Test Menu.

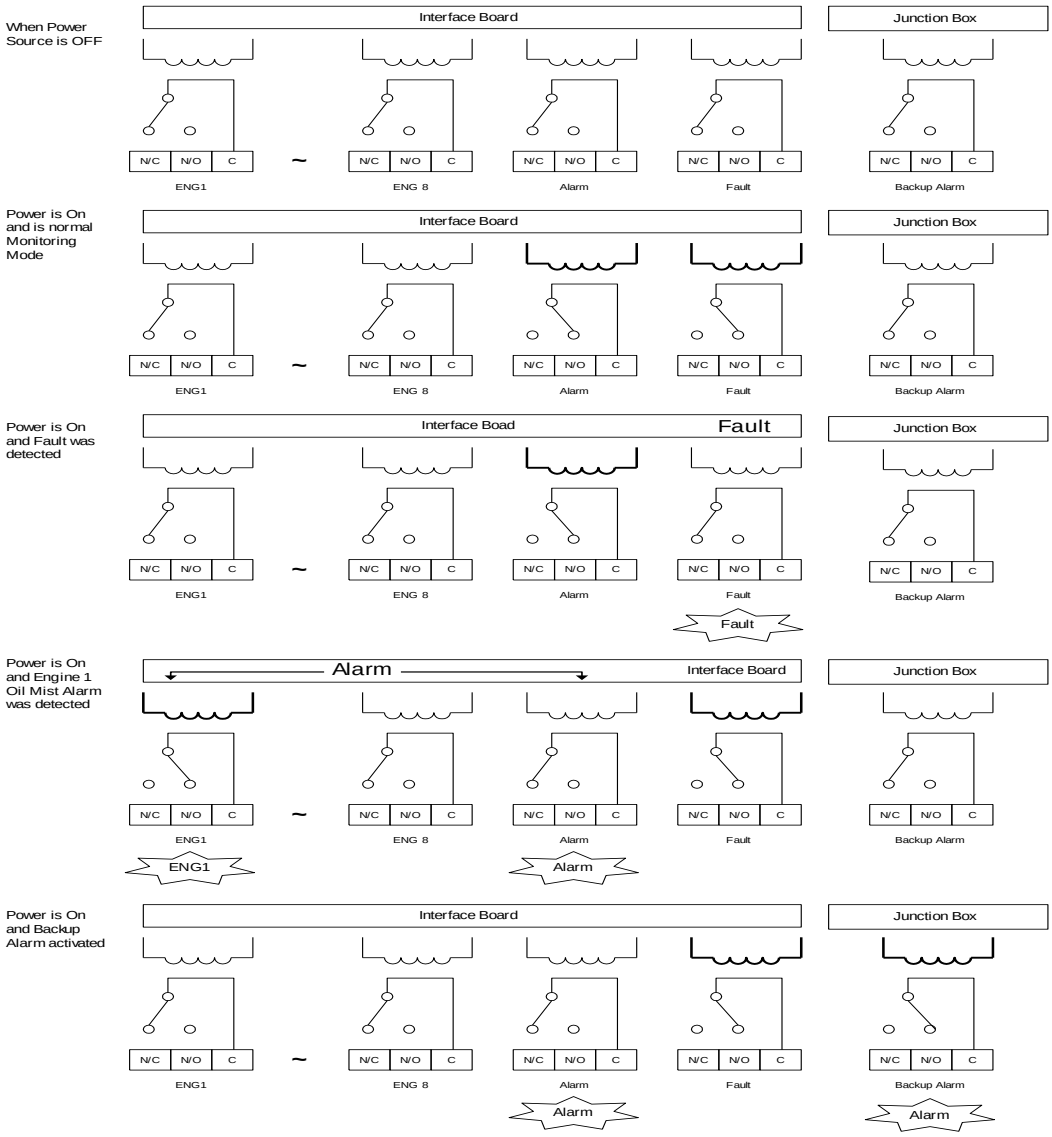

Figure 6 Relay Function Modes

Chapter 2 INSTALLATION AND COMMISSIONING

2.1 INSTALLATION

2.1.1 Control Unit Mounting

The Control Unit is designed for either bulkhead or flush mounting, and must be installed in a control room or similar environment, not in the engine room.

For bulkhead mounting fix to a rigid structure using the four M6 mounting flanges at the rear of the unit.

For flush mounting a bezel, part number 1-35100-K187 can be supplied (refer to Figure 9).

The position of the Control Unit must be sited for optimum visibility of the display. Sufficient space must be left around the Control Unit to allow the fitting and routing of the cables, and to facilitate easy access to all aspects of the Control Unit. A minimum of 500mm must be allowed at the front of the Control Unit to allow the door to be opened.

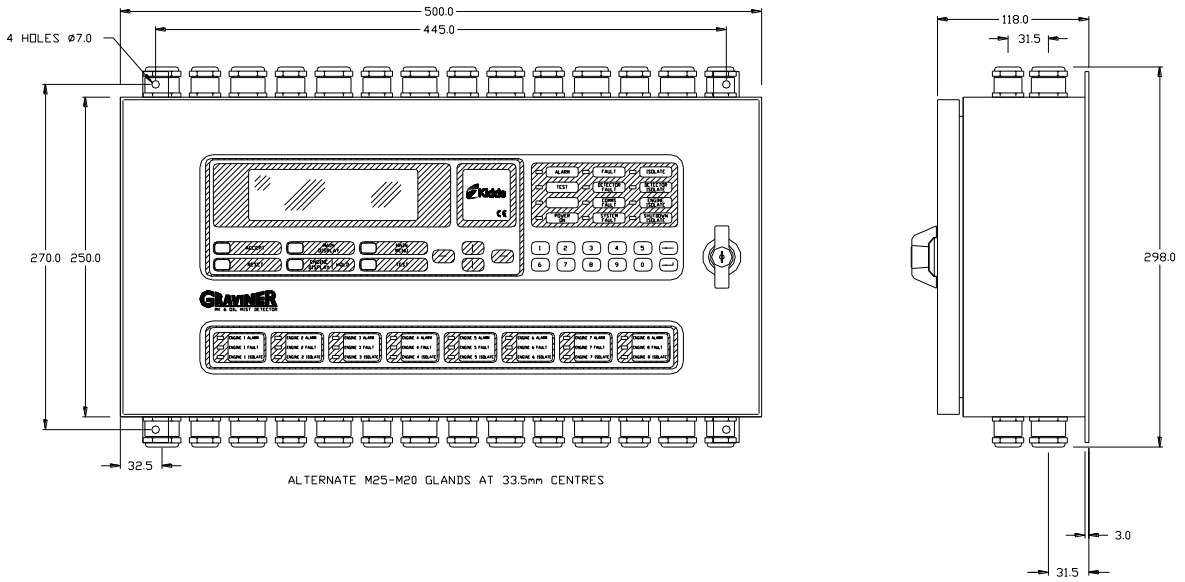

Figure 7 MK6 Control Unit Bulkhead Mounting (1-53836-K170) Installation Drawing

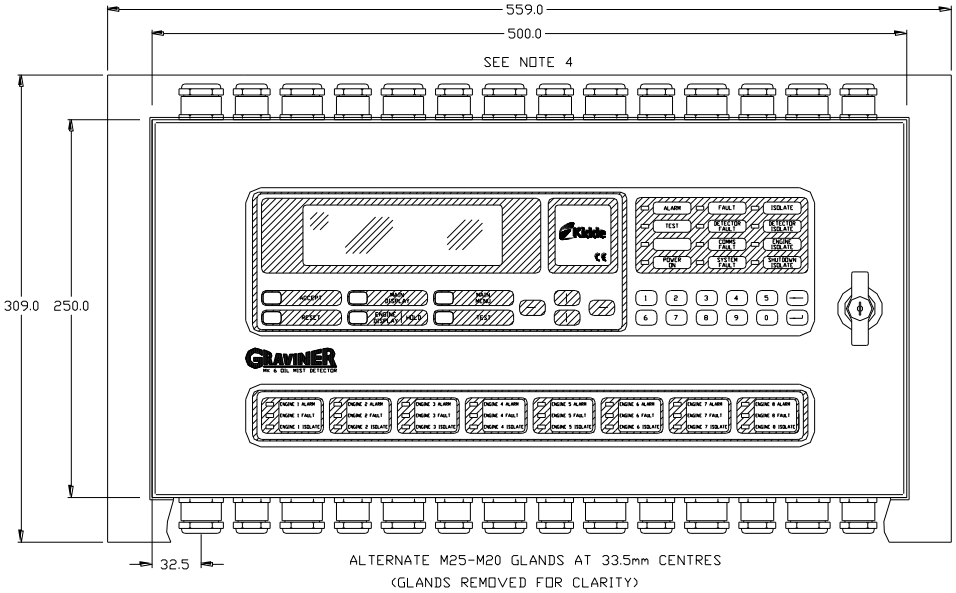

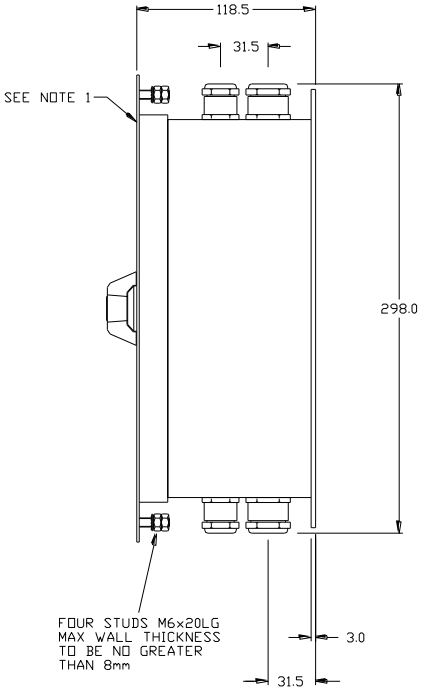

NOTES
1. IN ORDER FOR THE DOOR TO OPEN FULLY, AN ADDITIONAL 500mm MUST BE ALLOWED BEYOND THIS POINT.
2. SEE TABLE FOR THE NUMBER OF JUNCTION BOXES, RELAY OUTPUTS (ALARM, FAULT AND ENGINE SLOWDOWN) AND CABLE GLANDS/LOCKNUTS.
3. ON A ONE ENGINE SYSTEM ONE ALARM, ONE FAULT AND ONE ENGINE SLOW DOWN RELAY IS REQUIRED TOGETHER WITH TWO POWER SUPPLY INPUTS. IN CASES WHERE THERE ARE MORE ENGINES AN ADDITIONAL ENGINE SLOWDOWN RELAY WILL BE NEEDED FOR EACH ADDITIONAL ENGINE.
4. PROVISION HAS BEEN MADE FOR 14xM25 AND 14xM20 CABLE GLAND ENTRIES AT THE TOP OF THE ENCLOSURE AND 14xM25 AND 14xM20 AT THE BOTTOM. THESE ARE TO BE USED FOR POWER AND COMMUNICATIONS WIRING.

SYSTEM INSTALLATION REQUIREMENTS TABLE

NUMBER OF ENGINES	NUMBER OF JUNCTION BOXES	NUMBER OF RELAY OUTPUTS (SEE NOTE 3)	NUMBER OF M20/M25 CABLE GLANDS/LOCKNUTS REQUIRED.
1	1	3	7
2	2	4	10
3	3	5	13
4	4	6	16
5	5	7	19
6	6	8	22
7	7	9	25
8	8	10	28

Figure 8 MK6 Control Unit Flush Mounting (1-53836-K206) Installation Drawing

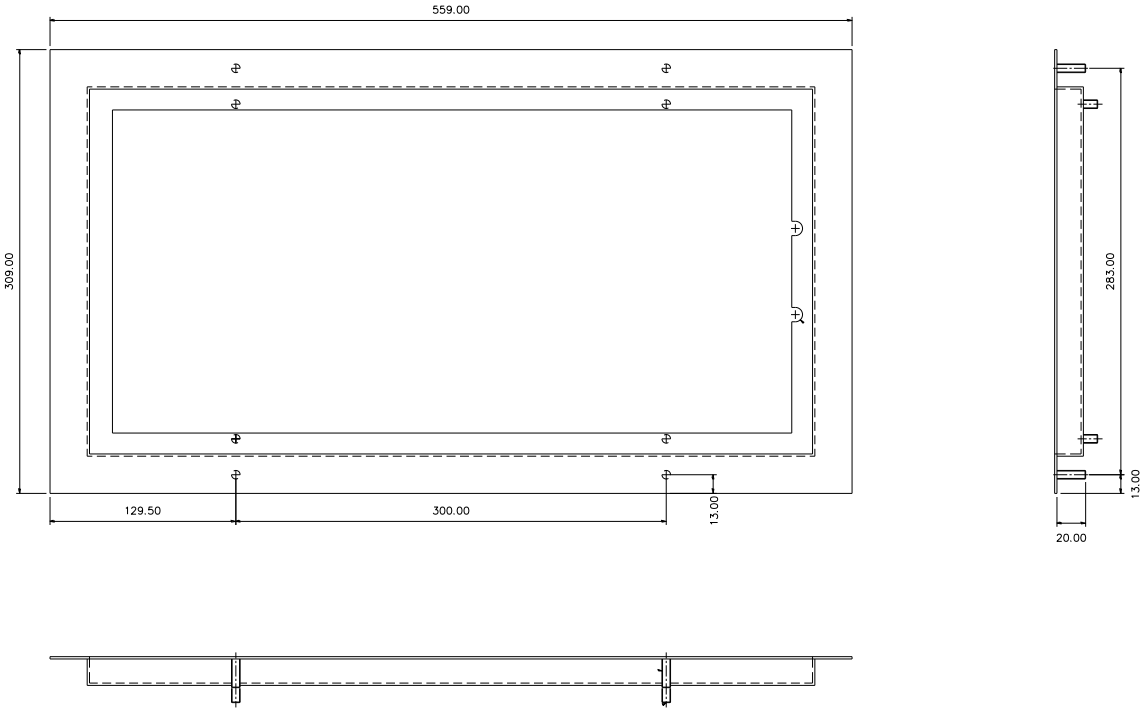

Figure 9 Bezel - Part Number 1-35100-K187

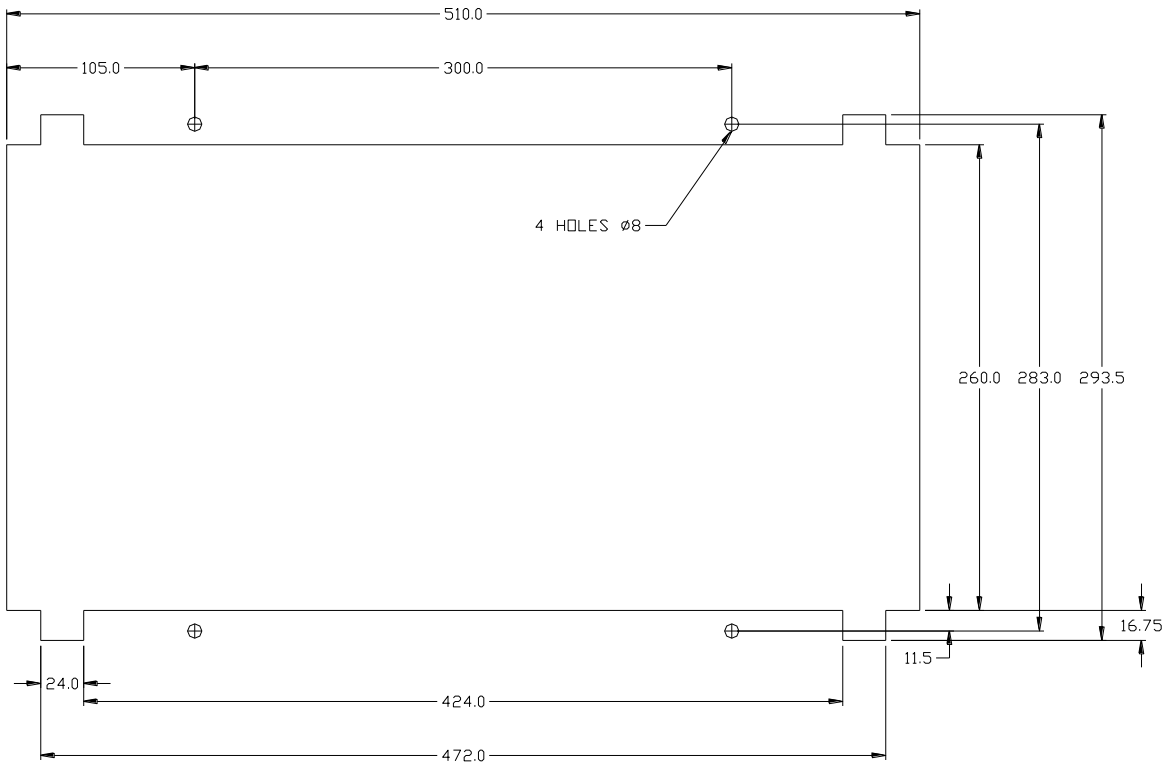

Figure 10 MK6 Control Unit Flush Mounting Installation Drawing Cut Out Details

2.1.2 Junction Box Mounting

The Junction Box is available with 1-D4720-001-XX (20mm glands) or 1-53836-K224-XX (25mm glands), and is designed for on-engine mounting. It is recommended that the Box is installed as near to the centre of the engine as possible to minimise Detector cable lengths. Mounting is via the four M6 locating holes in the box. Sufficient space must be left around the Junction Box to allow access to the cable glands and the routing of the cables and to facilitate easy access to all aspects of the Junction Box.

No. of Detectors supported	Junction Box (20mm glands)	Junction Box (25mm glands)
1	1-D4720-001-01	1-53836-K224-01
2	1-D4720-001-02	1-53836-K224-02
3	1-D4720-001-03	1-53836-K224-03
4	1-D4720-001-04	1-53836-K224-04
5	1-D4720-001-05	1-53836-K224-05
6	1-D4720-001-06	1-53836-k224-06
7	1-D4720-001-07	1-53836-K224-07
8	1-D4720-001-08	1-53836-K224-08
9	1-D4720-001-09	1-53836-K224-09
10	1-D4720-001-10	1-53836-K224-10
11	1-D4720-001-11	1-53836-K224-11
12	1-D4720-001-12	1-53836-K224-12
13	1-D4720-001-13	1-53836-K224-13
14	1-D4720-001-14	1-53836-K224-14

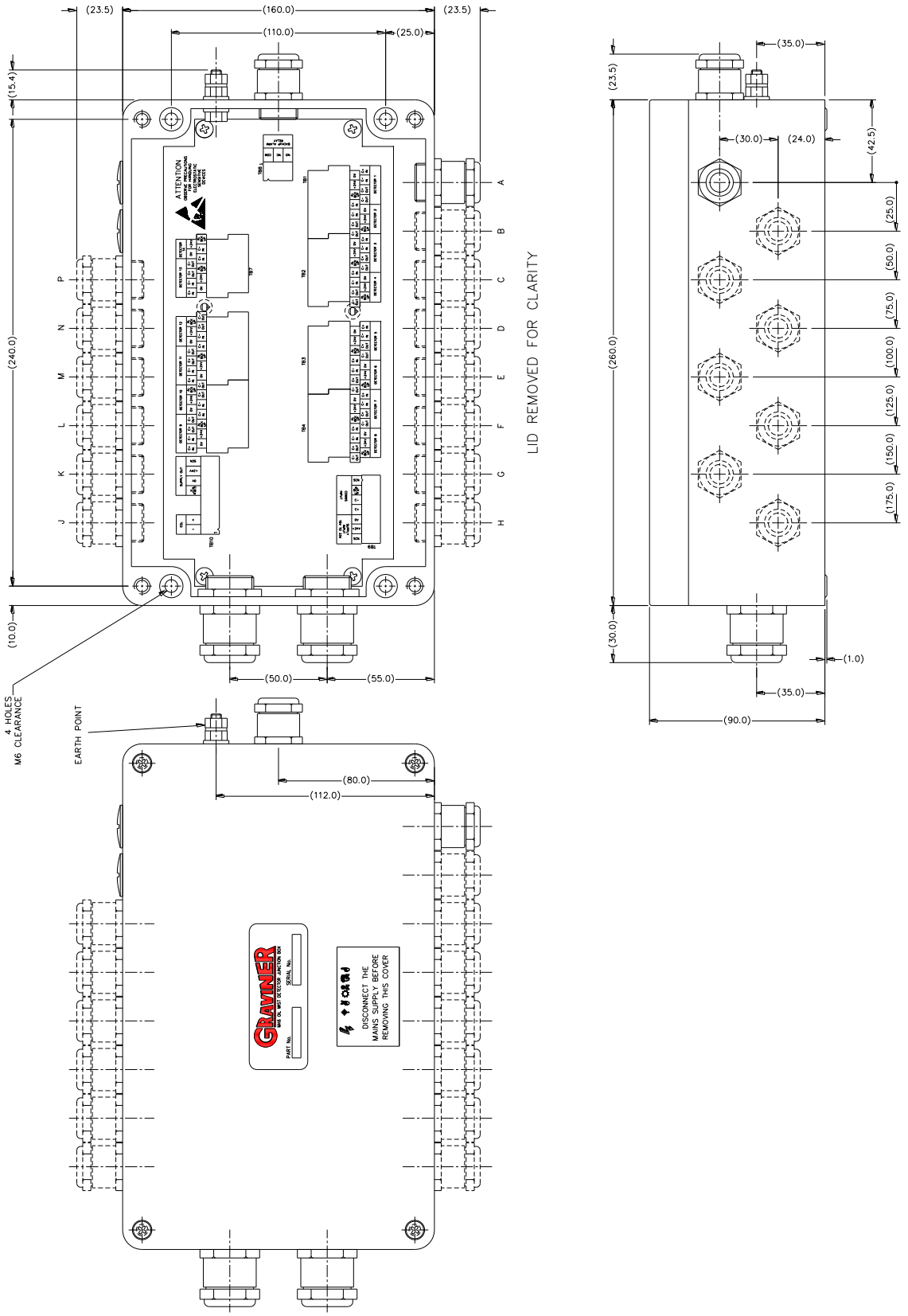

Figure 11 Junction Box Installation

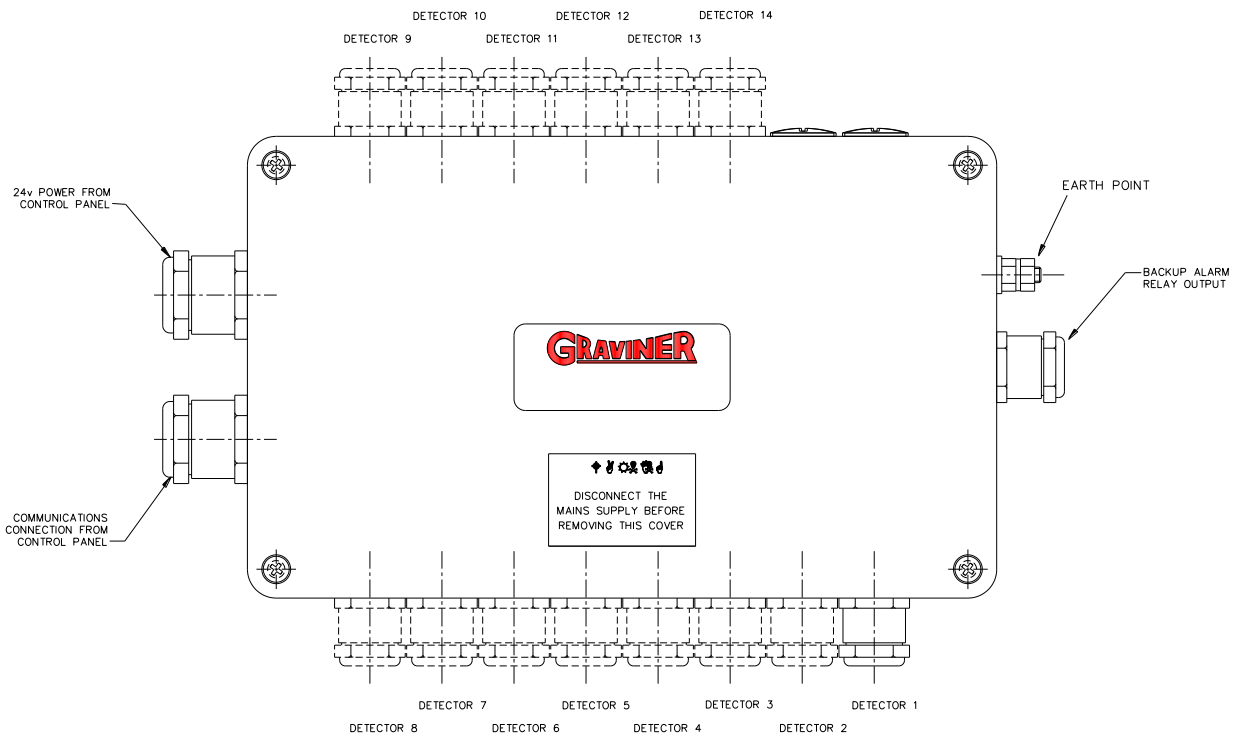

Figure 12 Junction Box External Connections

2.1.3 Detector Mounting

Each Detector is mounted to an individual crankcase via a ¾ inch BSP threaded hole.

Ensure all Detectors fitted to the engine are locked tightly in place by means of the lock nut supplied

It is recommended that the Detector is located at the upper part of the crankcase wall not in the direct line of the oil throw. On smaller engines it is permissible to mount the Detector on the crankcase door if desired or as installation dictates.

The Detector should ideally be mounted such that any oil throw comes from above the sample pipe.

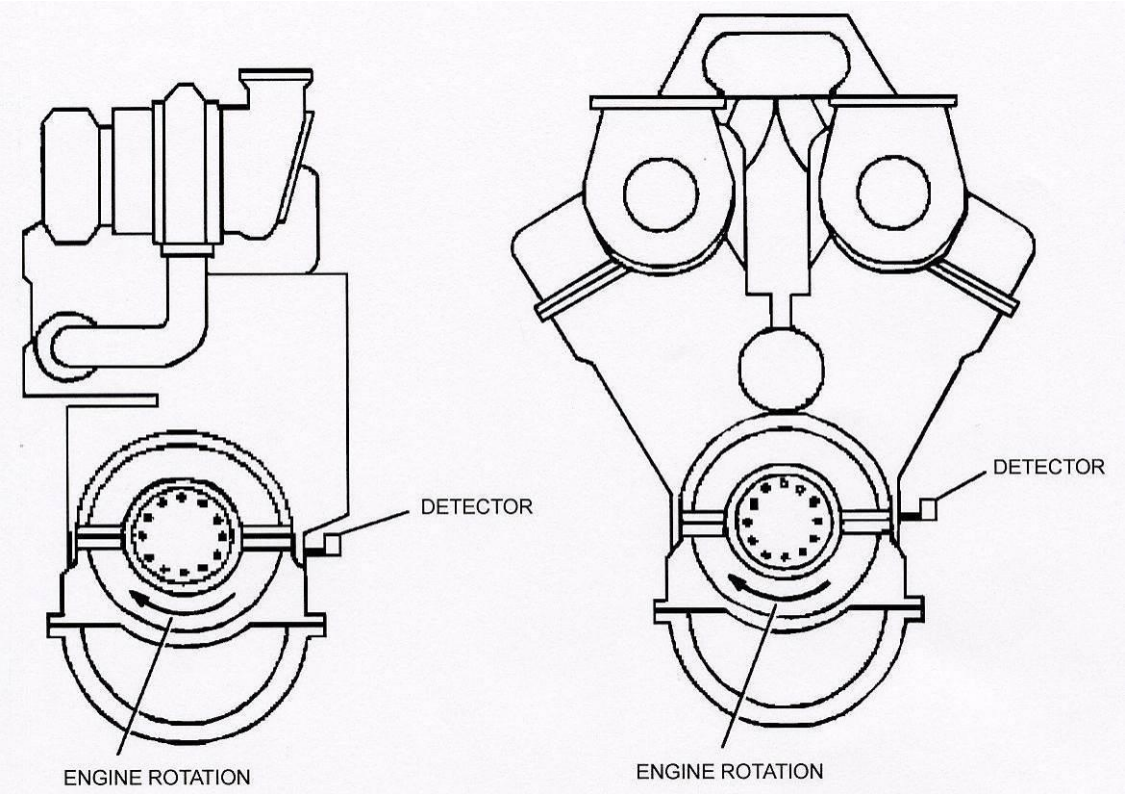

Figure 13 Ideal Mounting Position

A typical installation is shown below.

Figure 14 Typical Installation

The Detector must be fitted at a maximum of plus or minus 20 degrees from the vertical. Horizontally the Detector must be mounted level or with the Detector body inclined towards the engine to ensure oil drainage. Refer to Figure 15.

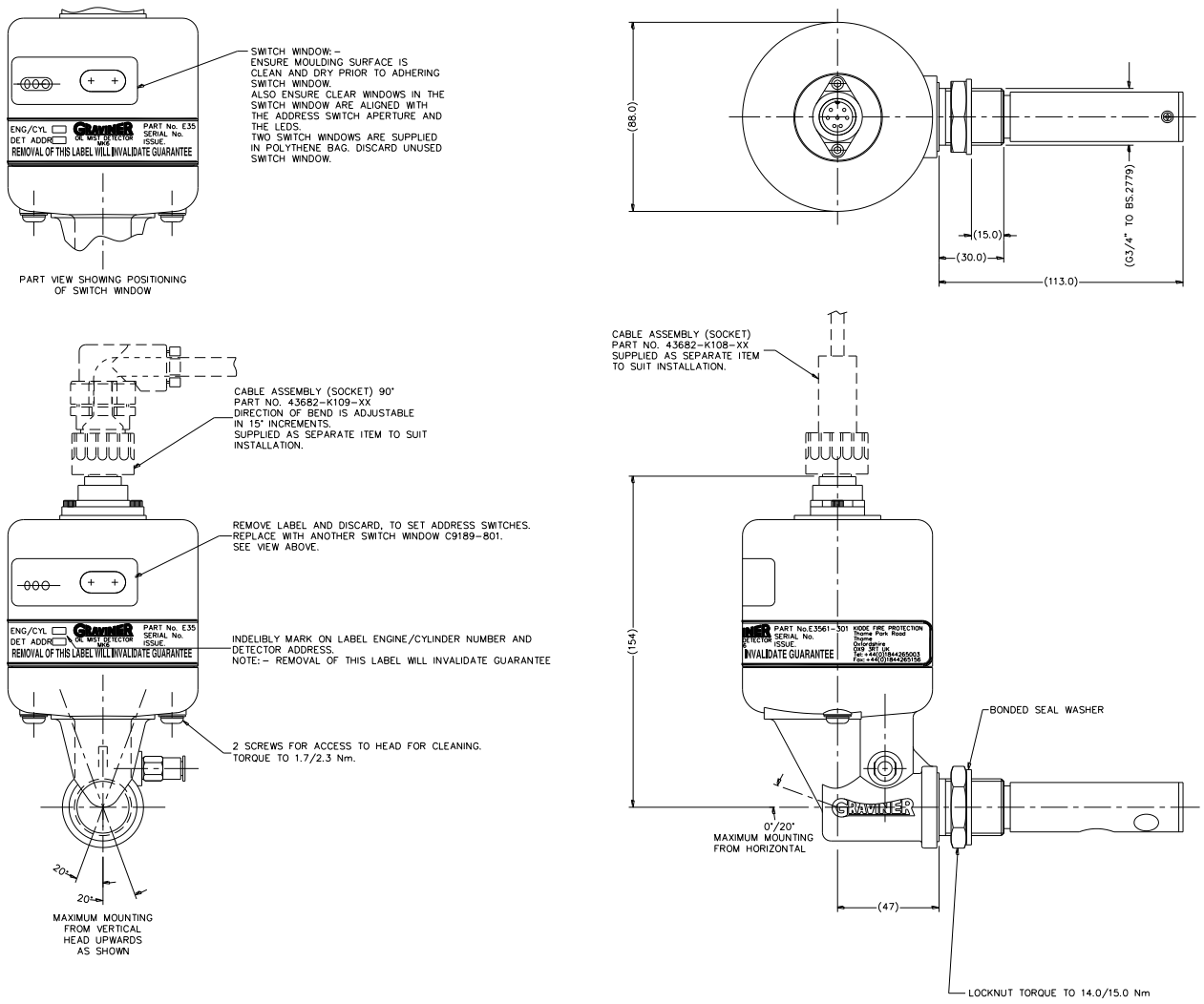

Figure 15 MK6 OMD Detector Head Installation 1-E3561-301

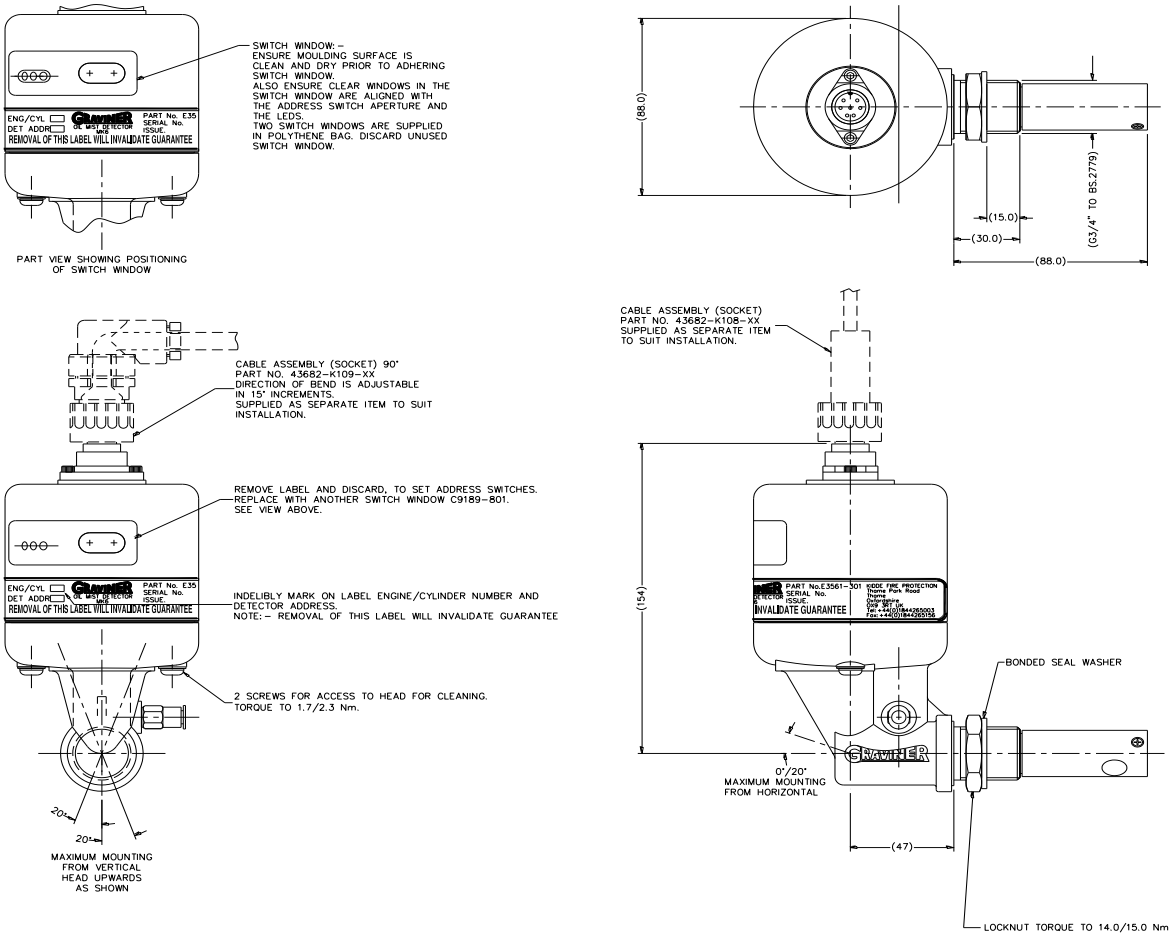

Figure 16 MK6 Detector Head Installation (Short sample pipe) (1-E3561-301-01)

2.1.4 Detector Cable Assemblies

Each Detector is connected via a straight or 90° bend cable assembly to its relevant Junction Box.

Cable Length m	Straight Connector Part No.	90° Connector Part No.
2.5	1-43682-K108	1-43682-K109
5.0	1-43682-K108-00	1-43682-K109-00
7.5	1-43682-K108-01	1-43682-K109-01
10.0	1-43682-K108-02	1-43682-K109-02
12.5	1-43682-K108-03	1-43682-K109-03
15.0	1-43682-K108-04	1-43682-K109-04
17.5	1-43682-K108-05	1-43682-K109-05
20.0	1-43682-K108-06	1-43682-K109-06
22.5	1-43682-K108-07	1-43682-K109-07
25.0	1-43682-K108-08	1-43682-K109-08

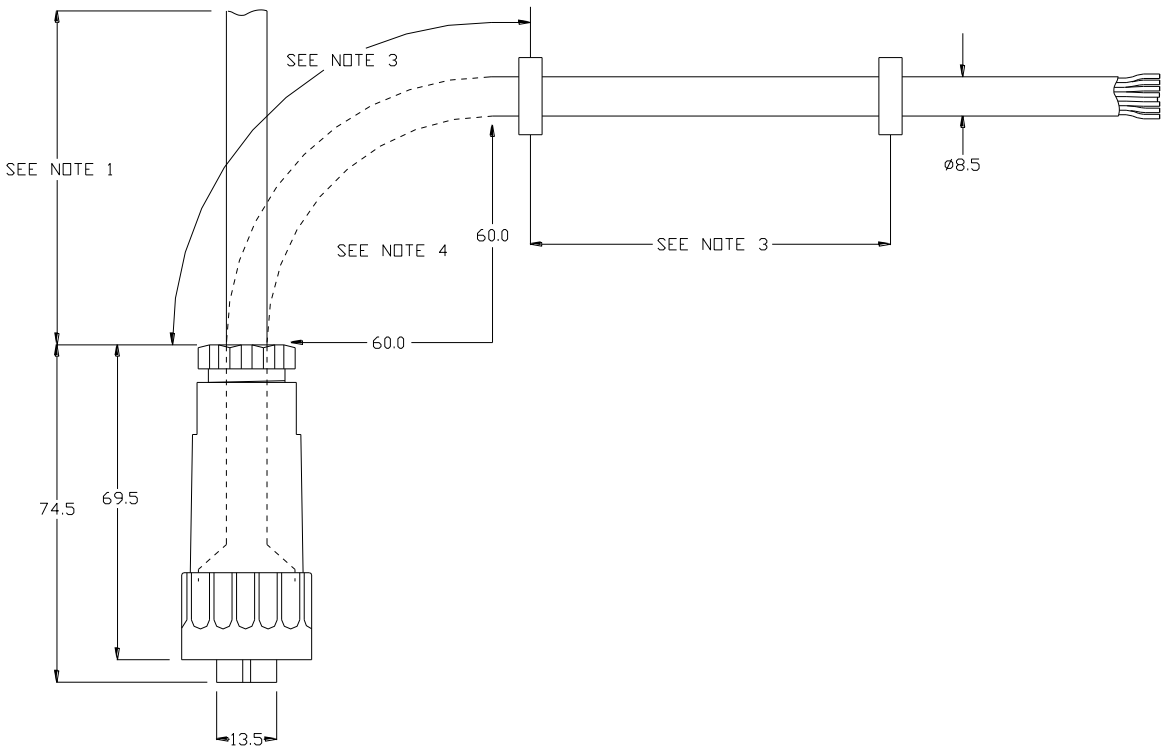

Figure 17 Detector Cable Assembly (Straight Connector)

Notes:

1. Cable Spec 8-core screened (90°C) Halogen free & oil resistant.
2. Cable lengths are ‘straight lengths’.
3. Clips to be secured every 0.5m (clips are not supplied by Kidde Fire Protection).
4. Do not exceed the minimum bend radius as shown.

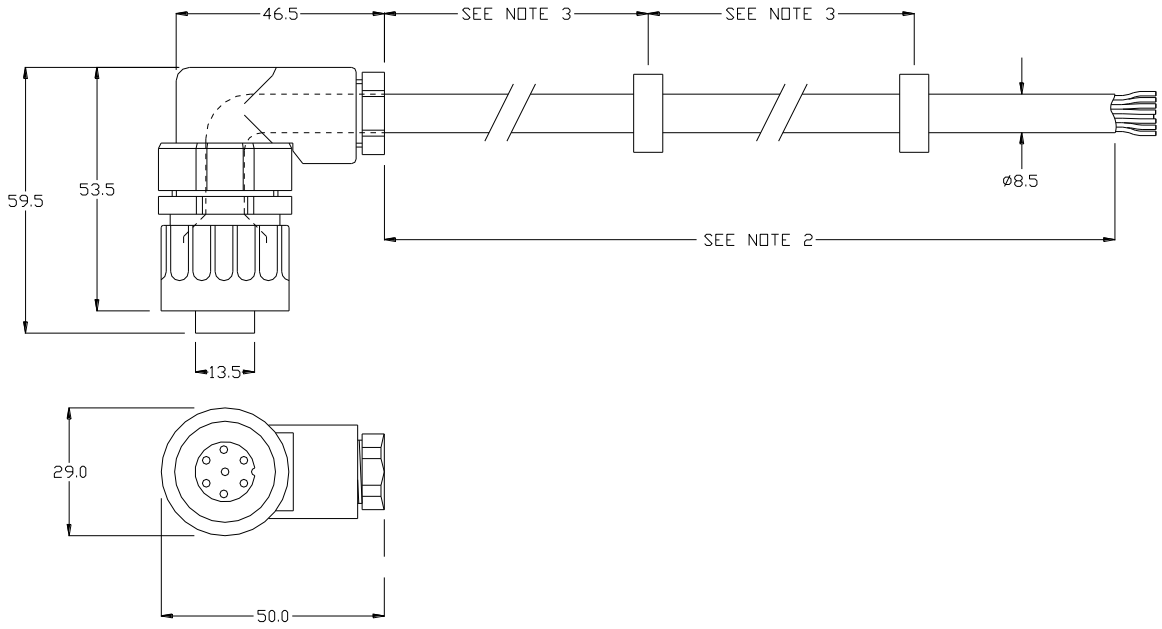

Figure 18 Detector Cable Assembly (Right Angle Connector)

The pin to pin connections for the Detector cables are shown in the table below:

Connector Pin No.	Colour of wire	Function	Last Detector Function
1	Pink	Comms Out -	TB10 EOL-
1	White	Comms In -	C- in
2	Yellow	Comms In+	C+ in
2	Brown	Comms Out +	TB10 EOL+
3	Grey	Backup Alarm	Back-up Alarm
5	Blue	0v supply	0V
6	Red	24v supply	+24V
Centre	Screen	Cable screen	Cable screen

2.2 CONNECTING THE SYSTEM

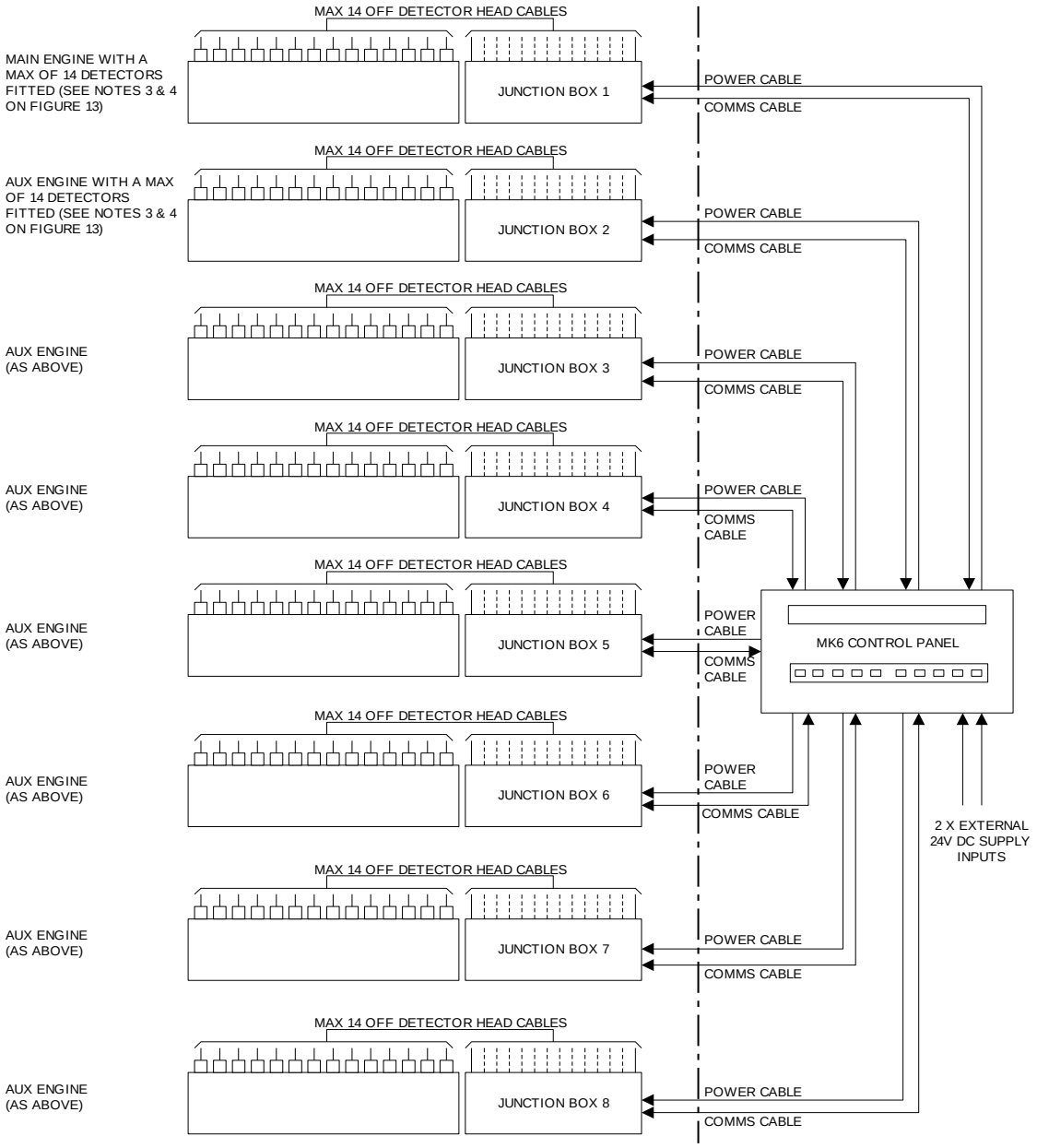

EQUIPMENT LIST	
PART No.	DESCRIPTION
1-E3561-301	OMD MK6 Detector Head
1-53836-K170	OMD MK6 CONTROL PANEL
1-53836-K252	OMD MK6 JUNCTION BOX
1-43862-K108	DETECTOR HEAD CABLE (STRAIGHT CONNECTOR) – 2.5m Long
1-43862-K108-00	DETECTOR HEAD CABLE (STRAIGHT CONNECTOR) – 5m Long
1-43862-K108-01	DETECTOR HEAD CABLE (STRAIGHT CONNECTOR) – 7.5m Long
1-43862-K108-02	DETECTOR HEAD CABLE (STRAIGHT CONNECTOR) – 10m Long
1-43862-K108-03	DETECTOR HEAD CABLE (STRAIGHT CONNECTOR) – 12.5m Long
1-43862-K108-04	DETECTOR HEAD CABLE (STRAIGHT CONNECTOR) – 15m Long
1-43862-K108-05	DETECTOR HEAD CABLE (STRAIGHT CONNECTOR) – 17.5m Long
1-43862-K108-06	DETECTOR HEAD CABLE (STRAIGHT CONNECTOR) – 20m Long
1-43862-K108-07	DETECTOR HEAD CABLE (STRAIGHT CONNECTOR) – 22.5m Long
1-43862-K108-08	DETECTOR HEAD CABLE (STRAIGHT CONNECTOR) – 25m Long
1-43862-K109	DETECTOR HEAD CABLE (RIGHT ANGLE CONNECTOR) – 2.5m Long
1-43862-K109-00	DETECTOR HEAD CABLE (RIGHT ANGLE CONNECTOR) – 5m Long
1-43862-K109-01	DETECTOR HEAD CABLE (RIGHT ANGLE CONNECTOR) – 7.5m Long
1-43862-K109-02	DETECTOR HEAD CABLE (RIGHT ANGLE CONNECTOR) – 10m Long
1-43862-K109-03	DETECTOR HEAD CABLE (RIGHT ANGLE CONNECTOR) – 12.5m Long
1-43862-K109-04	DETECTOR HEAD CABLE (RIGHT ANGLE CONNECTOR) – 15m Long
1-43862-K109-05	DETECTOR HEAD CABLE (RIGHT ANGLE CONNECTOR) – 17.5m Long
1-43862-K109-06	DETECTOR HEAD CABLE (RIGHT ANGLE CONNECTOR) – 20m Long
1-43862-K109-07	DETECTOR HEAD CABLE (RIGHT ANGLE CONNECTOR) – 22.5m Long
1-43862-K109-08	DETECTOR HEAD CABLE (RIGHT ANGLE CONNECTOR) – 25m Long

POWER CABLE
2 CORES + EARTH, CSA 2.5mm² (50/0.25mm)
FLEXIBLE STRANDED BARE COPPER CONDUCTORS,
LOW SMOKE, HALOGEN FREE INSULATION,
CORES LAID UP, ALUMININIUM/POLYESTER FOIL
PLUS A TINNED COPPER BRAID.
LOW SMOKE HALOGEN FREE SHEATH - GREY
OUTSIDE DIAMETER 9.8mm.
OPERATING TEMPERATURE 0 TO 80°C
SUPPLIER - FS CABLES, ORDER CODE 42302503 OR SIMILAR

COMMS CABLE
2 TWISTED LOW CAPACITANCE PAIRS 24(7)AWG
TINNED COPPER CONDUCTORS.
FOAM POLYOLEFIN INSULATION, EANH PAIRFOIL
SCREENED WITH A TINNED COPPER DRAIN WIRE.
LOW SMOKE HALOGEN FREE SHEATH - GREY
OUTSIDE DIAMETER 8.1mm.
OPERATING TEMPERATURE 0 TO 70°C
SUPPLIER - FS CABLES, ORDER CODE 240PFFH OR SIMILAR.

Figure 19 (Sheet 1 of 3): MK6 OMD System Part Number 1-E9261-002

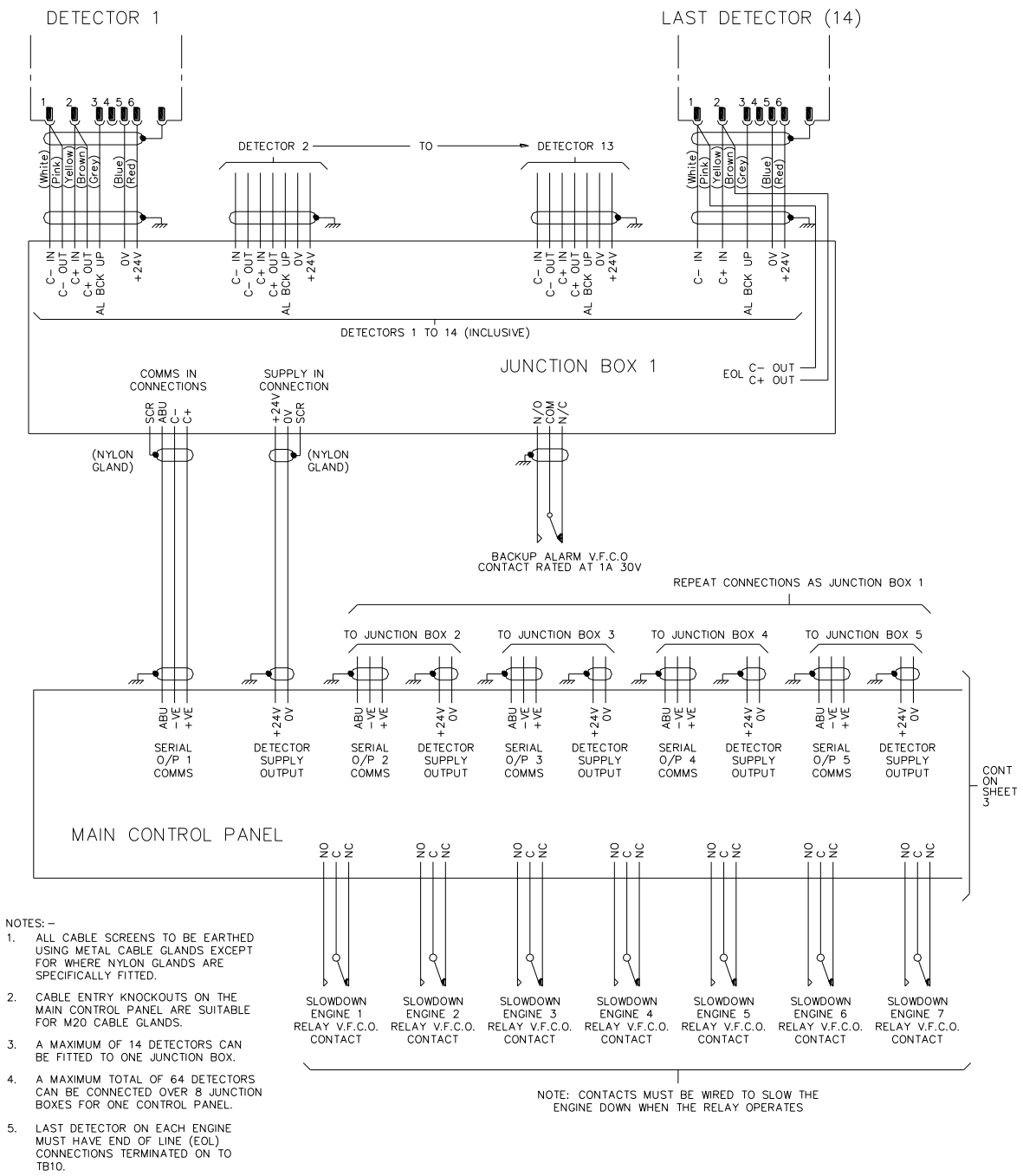

Figure 20 (Sheet 2 of 3): MK6 OMD System Part Number 1-E9261-002

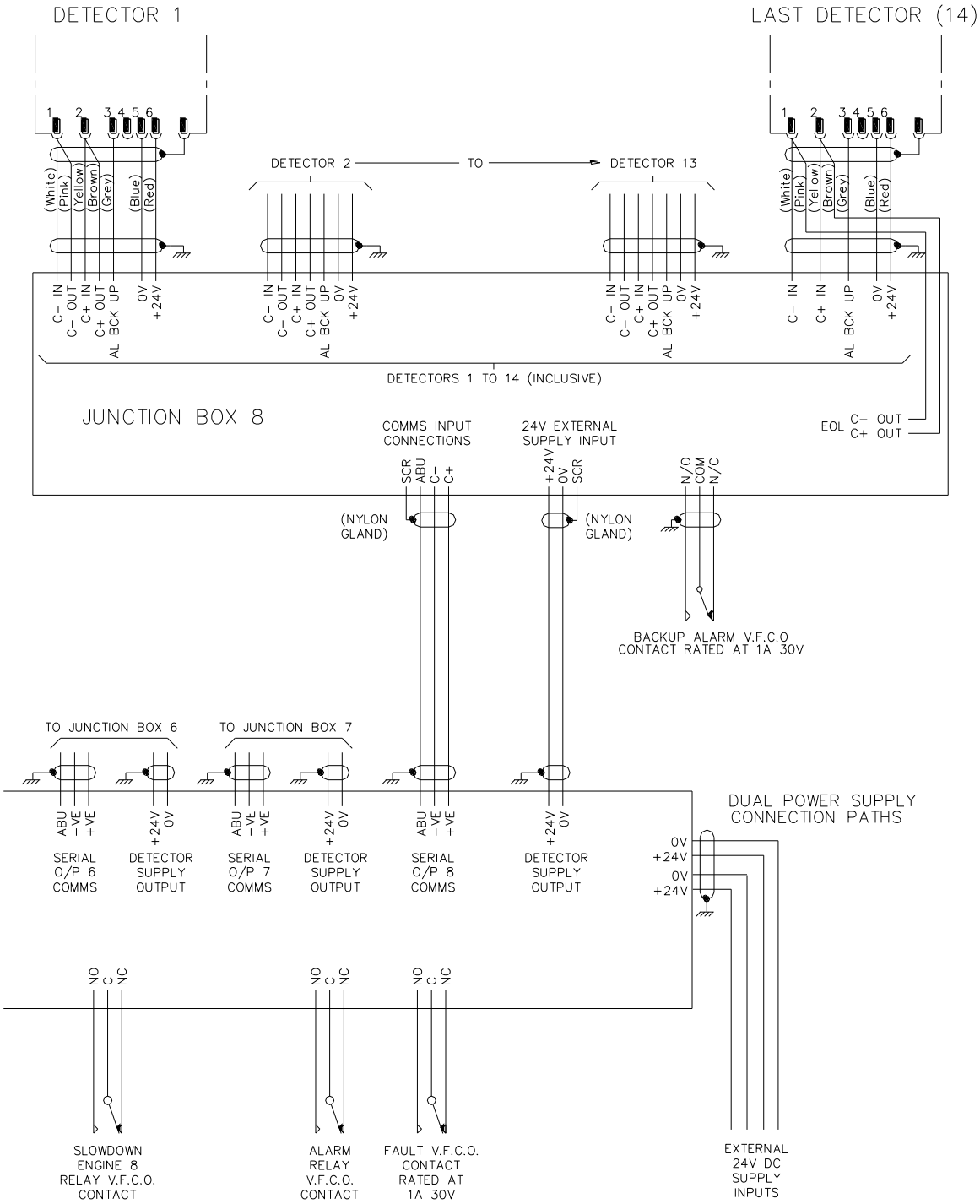

Figure 21 (Sheet 3 of 3): MK6 OMD System Part Number 1-E9261-002

2.2.1 Input power

To ensure that a single fault does not produce a failure of the system two separate +24 V dc and 0 V dc power input cables for the Control Unit should be terminated onto terminal block TB5.

Note all terminations should be made using crimped wires.

For each of the power connections strip the power cable to the required length to connect to the terminals in the Control Unit. Then remove approximately 1cm of the outer sheath to expose the cable screen as shown below.

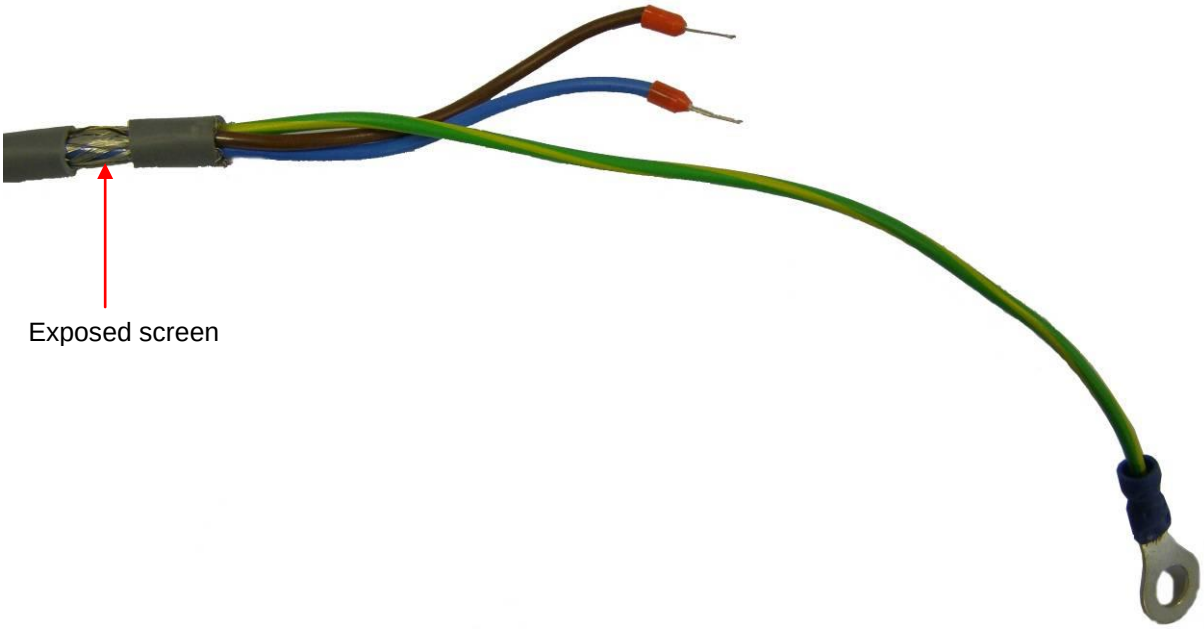

Figure 22 Power cable

Feed the cable into the Control Unit via a metal EMC gland, e.g. Lapp Kabel Skintop MS-SC-M-XL range, ensuring that the metal prongs make contact with the exposed cable screen as shown below. The gland should be fixed in place using a toothed nut to cut through the Control Unit paint.

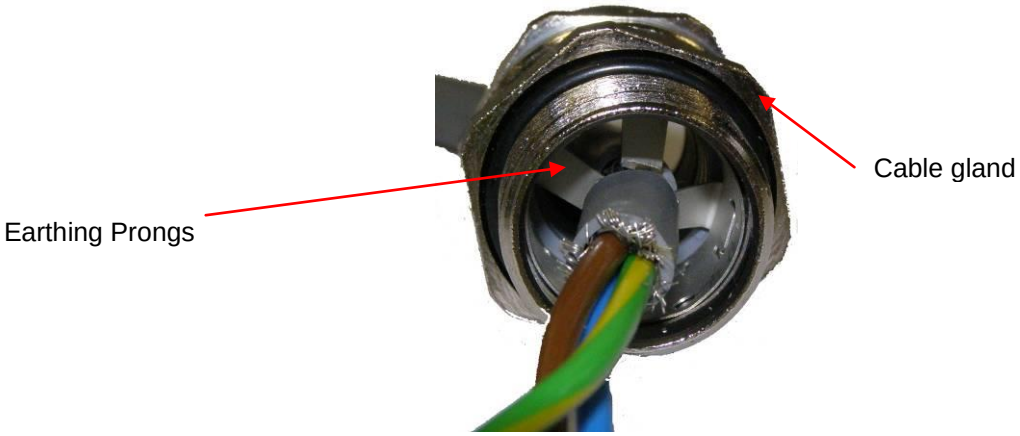

Figure 23 Power cable through EMC gland

Connect the earth wire to the earth stud, see Figure 24

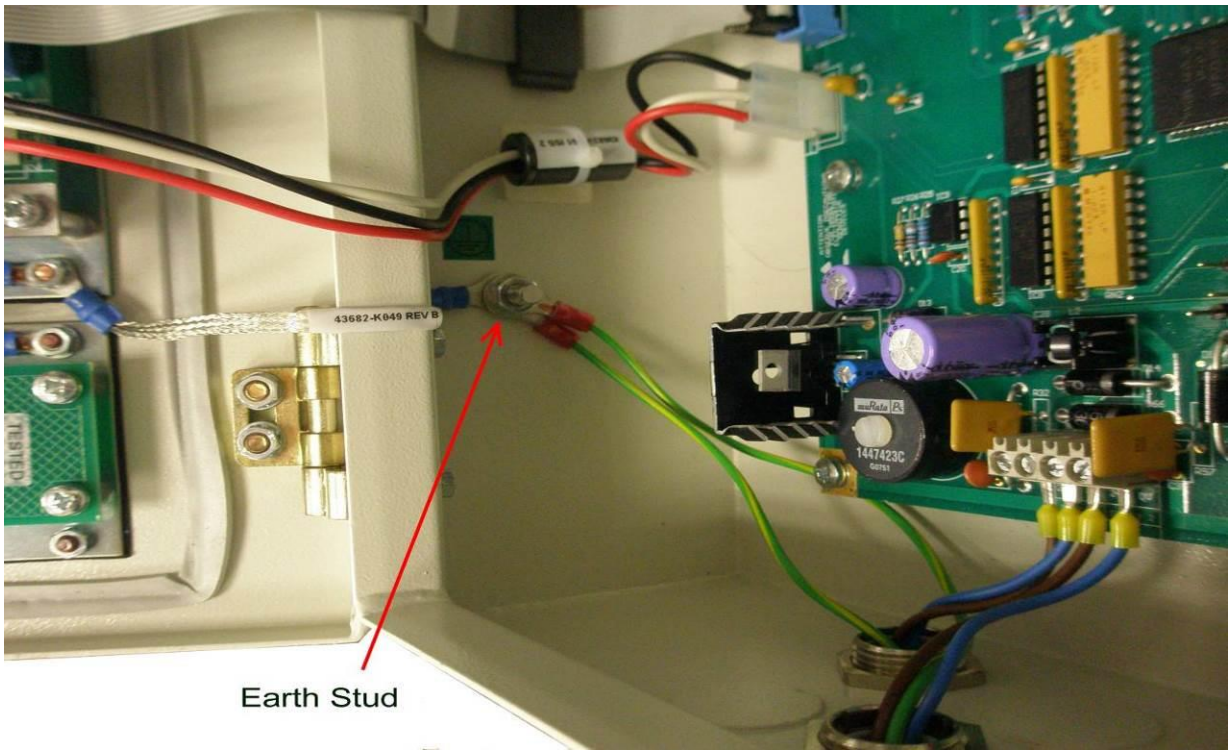

Figure 24 Power Input Cable Earth Stud

Connect the 24v and 0v in to TB5 on the Terminal Board, 1-44782-K183, see Figure 24.

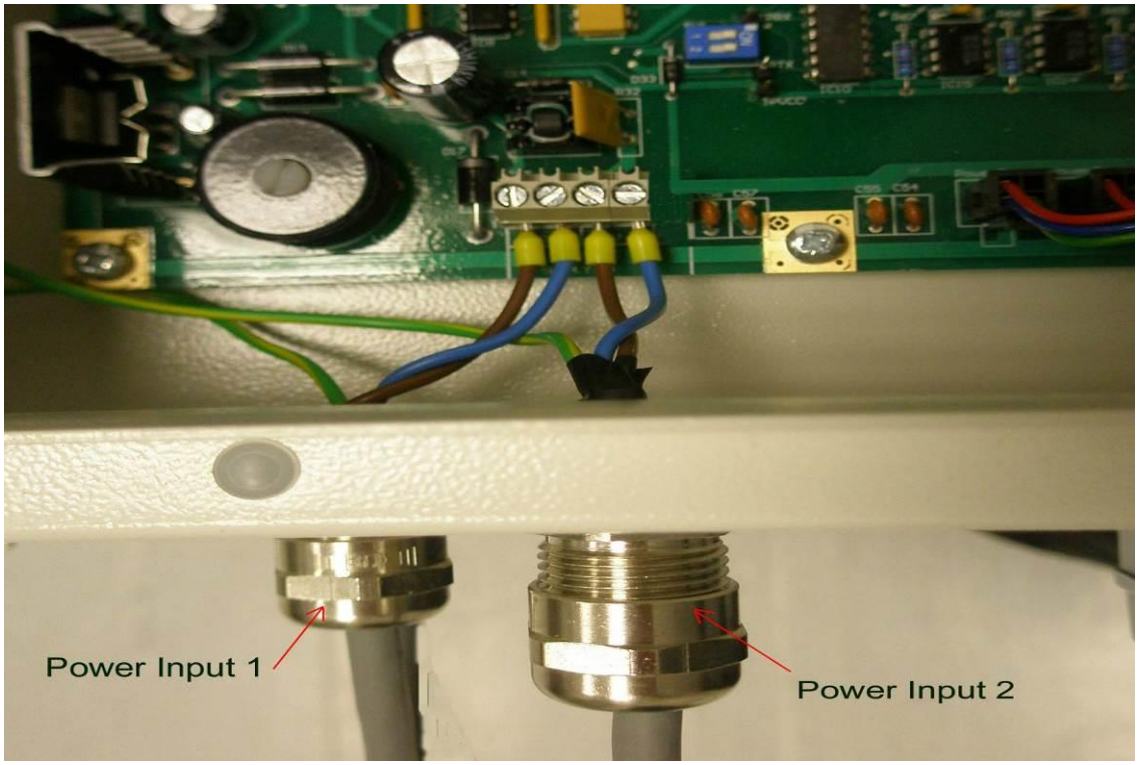

Figure 25 Power connections

The Control Unit should be connected from the earth stud to a suitable earthing point.

2.2.2 Control Unit Relay Connections

The connection to the Slowdown / Shutdown relays, Common Alarm relay and Fault relay should be made using screened cable. For each of the relay connection strip the cable to the required length to connect to the terminals in the Control Unit. Then remove approximately 1cm of the outer sheath to expose the cable screen as shown below see Figure 26.

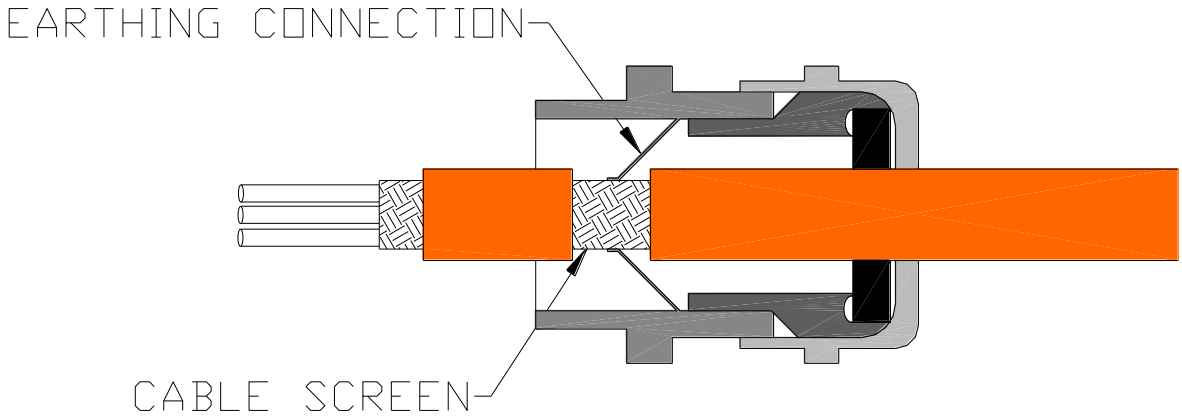

Figure 26 Control Unit relay cable assembly

Feed the cable into the Control Unit via a metal EMC gland, e.g. Lapp Kabel Skintop MS-SC-M-XL range, ensuring that the metal prongs make contact with the exposed cable screen as shown. The gland should be fixed in place using a toothed nut to cut through the Control Unit paint.

2.2.3 Control Unit to Junction Box Connections

Control Unit Connections

The cables from the Control Unit to each Junction Box should be of the following types:

Power Cable:

2 Cores + Earth, CSA 2.5mm^2 (50/0.25mm), flexible stranded bare copper conductors, low smoke halogen free insulation, cores laid up, braided screen, low smoke halogen free sheath – grey, outside diameter 9.8mm, operating temperature 0°C + 80°C.

Approved cables

Lapp Kabel	CY cable 3 core 2.5mm^2
Prysmian	LSM-HF 3 core 2.5mm^2
Helkama	LKAM-HF 3 core 2.5mm^2

Communications Cable:

2 Twisted low capacitance pairs, 27(7) AWG tinned copper conductors, foam polyolefin insulation, each pair foil screened with a tinned copper drain wire, low smoke halogen free sheath – grey, outside diameter 8.1mm, operating temperature 0°C to 70°C.

Approved cables

Beldon	9729
Helkama	RFE-HF(i) 2x2x0.75
FS Cables	2402PIFFH
Jinro	60V RCOP(IS)

1. At the Control Unit strip the power and communications cables to the required length. The cables should be long enough to reach easily from the gland to the terminal and run tidily around the edge of the Control Unit. Leave approximately 35mm of screen and fold it back over the outer insulation.

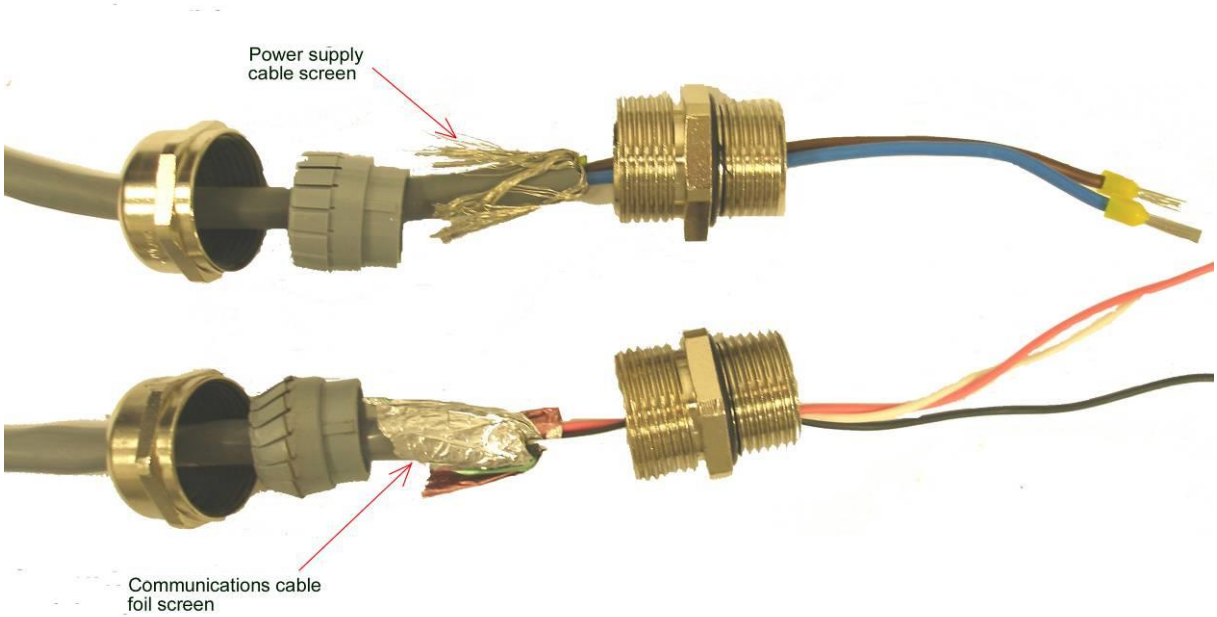

Figure 27 Cable Gland Isolation

2. Feed the cable into the Control Unit via a metal EMC gland, e.g. Lapp Kabel Skintop MS-SC-M-XL range, ensuring that the metal prongs make contact with the exposed cable screen as shown below

Figure 28 Cable Gland Isolation

3. Remove a suitable knockout from the Control Unit panel and fix the cable glands in place using a toothed nut to cut through the paint.

Figure 29 Cable Gland Isolation

4. Connect the power cable in place at the Interface Board within the Control Unit.

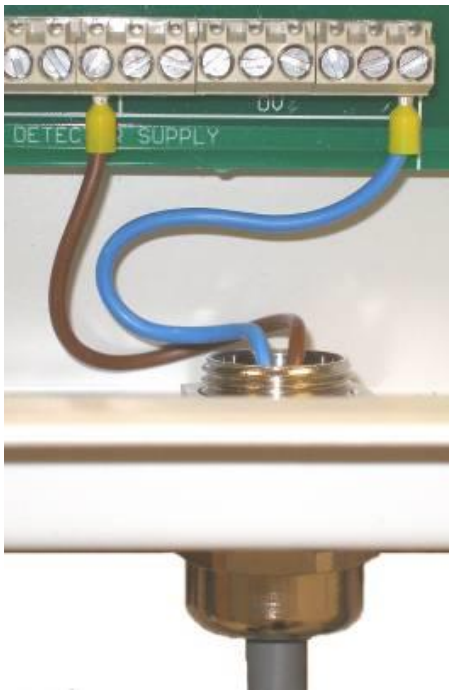

Figure 30 Power cable connections to Interface Board.

5. Connect the Communications cable in place at the top of the Interface Board.

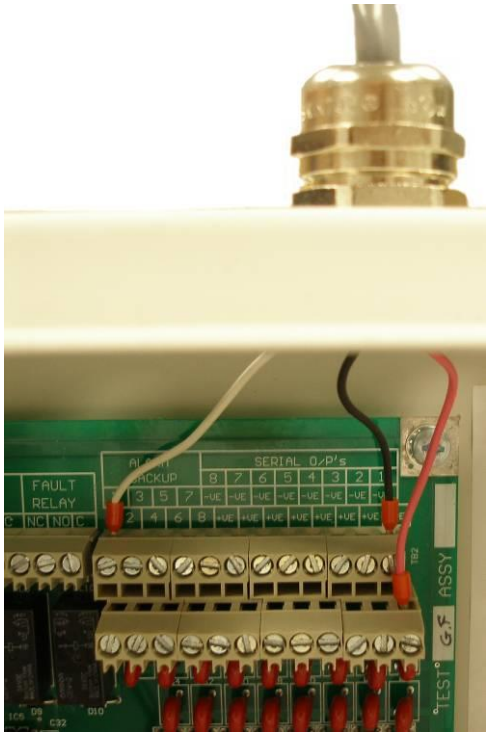

Figure 31 Communications cable connections to Interface Board

Junction Box Connections

1. At the Junction Box strip the power supply cable to the required length for ease of installation. Approximately 100mm is usually suitable. For braided cables twist the cable screen to produce a tail. For foil screened cables use the drain wire.

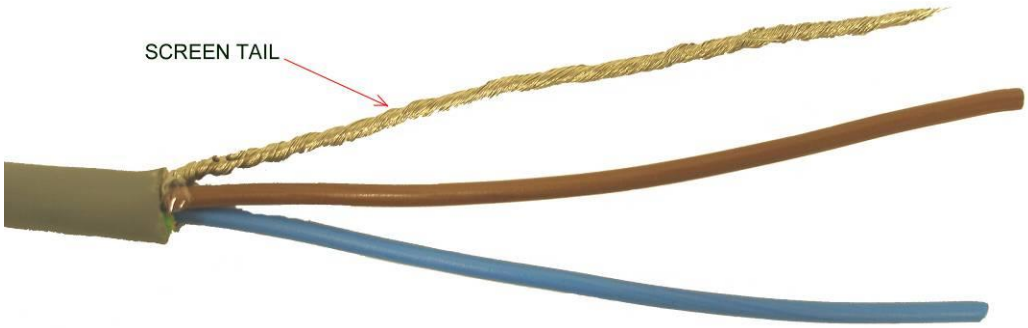

Figure 32 Power cable Screen Tail.

2. Place insulation around the earth tail

Figure 33 Power cable Screen Tail Insulation.

Connect the wires in to the Junction Box Communications and Power Input terminals.

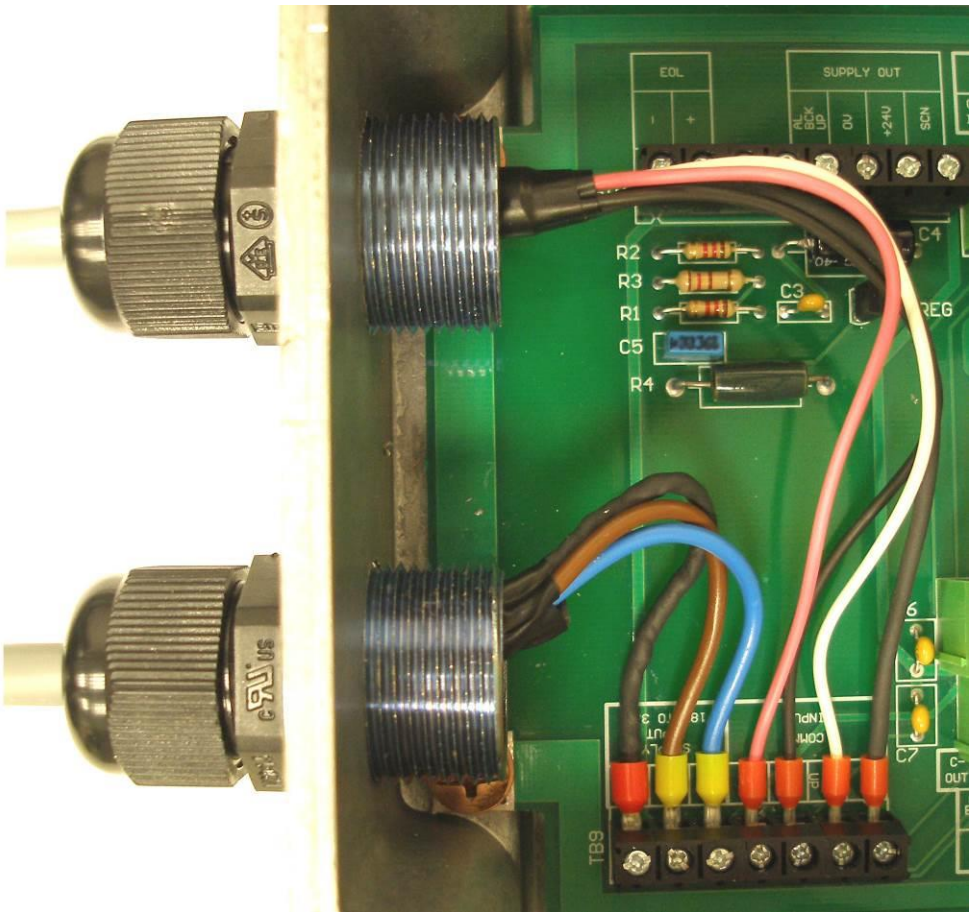

Figure 34 Junction Box Power cable & Communications terminal connections.

3. When complete the Junction Box wiring should look like the photograph below.

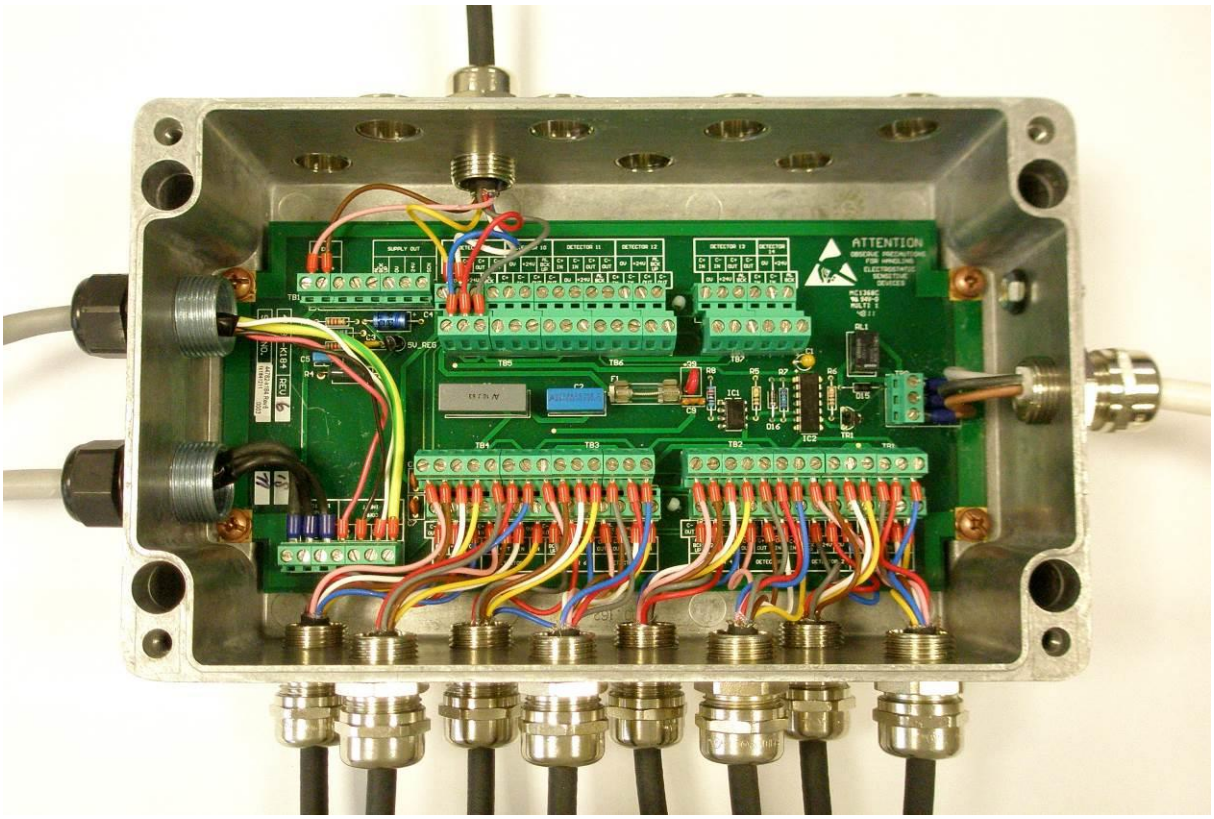

Figure 35 MK6 Junction Box Connections

Detector Cable Assemblies

Each Detector is connected via a straight or 90° bend cable assembly to its relevant Junction Box.

Cable Length m	Straight Connector Part No.	90° Connector Part No.
2.5	1-43682-K108	1-43682-K109
5.0	1-43682-K108-00	1-43682-K109-00
7.5	1-43682-K108-01	1-43682-K109-01
10.0	1-43682-K108-02	1-43682-K109-02
12.5	1-43682-K108-03	1-43682-K109-03
15.0	1-43682-K108-04	1-43682-K109-04
17.5	1-43682-K108-05	1-43682-K109-05
20.0	1-43682-K108-06	1-43682-K109-06
22.5	1-43682-K108-07	1-43682-K109-07
25.0	1-43682-K108-08	1-43682-K109-08

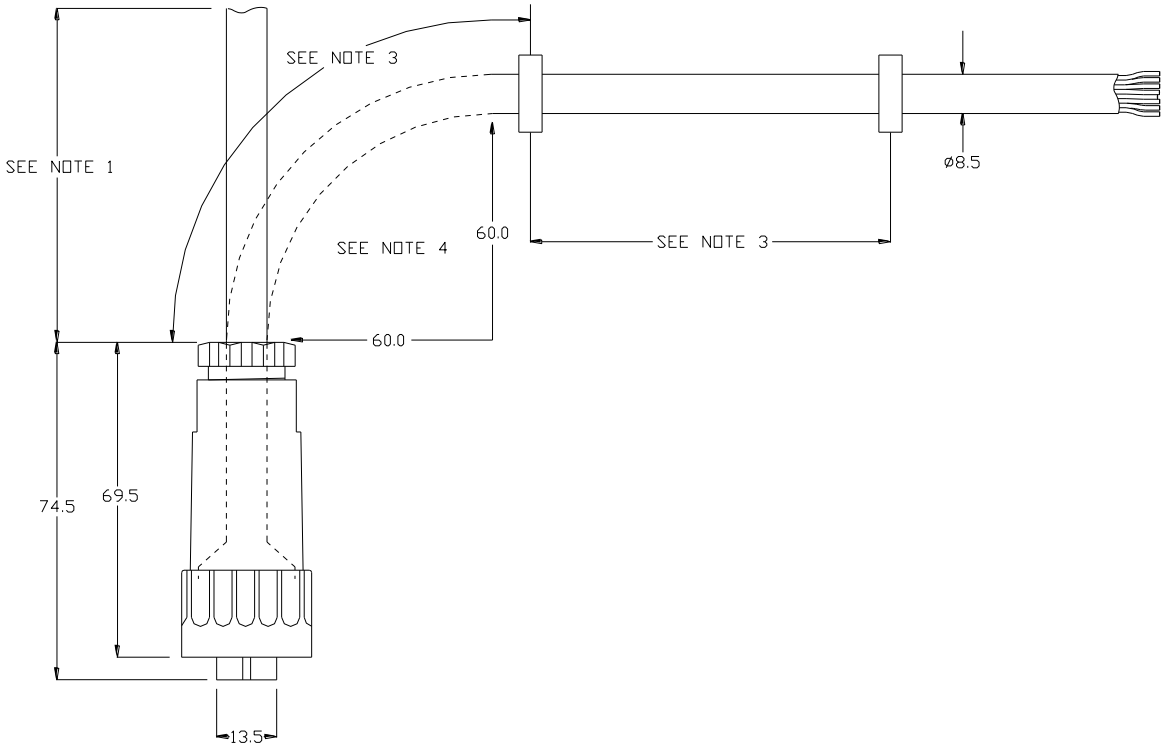

Figure 36 Detector Cable Assembly (Straight Connector)

Notes:

1. Cable Spec 8-core screened (90°C) Halogen free & oil resistant.
2. Cable lengths are ‘straight lengths’.
3. Clips to be secured every 0.5m (clips are not supplied by Kidde Fire Protection).
4. Do not exceed the minimum bend radius as shown.

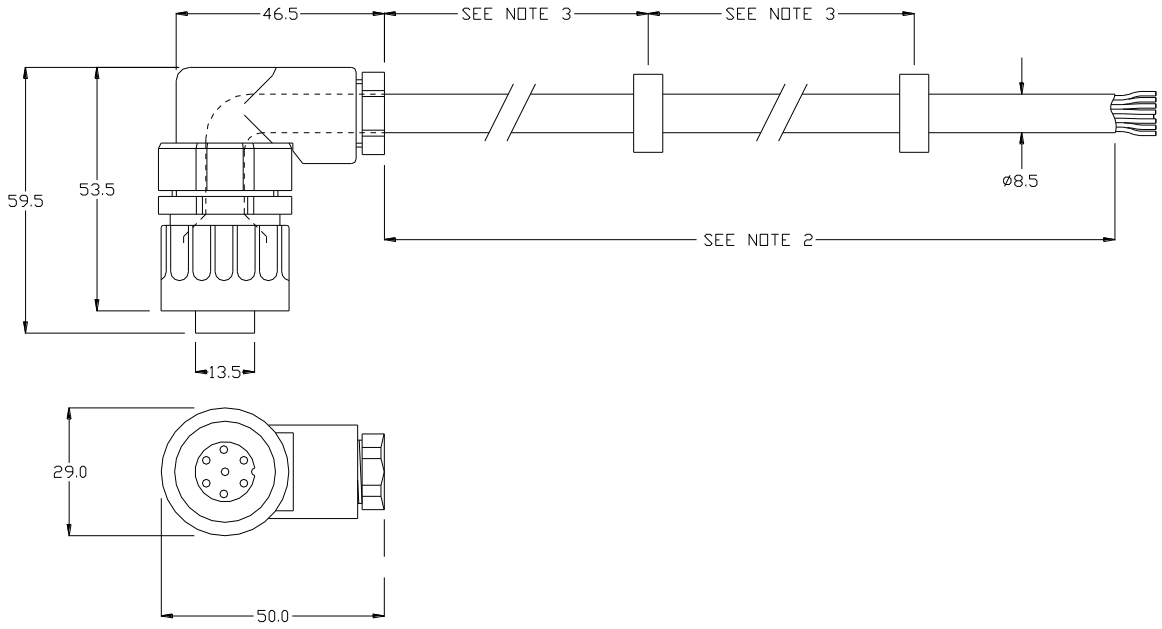

Figure 37 Detector Cable Assembly (Right Angle Connector)

2.2.4 Junction Box to Detector Connections

1. At the Junction Box strip the Detector cables to the required length. The cables should be long enough to reach easily from the gland to the terminals. Then remove approximately 1cm of the outer sheath to expose the cable screen as shown below

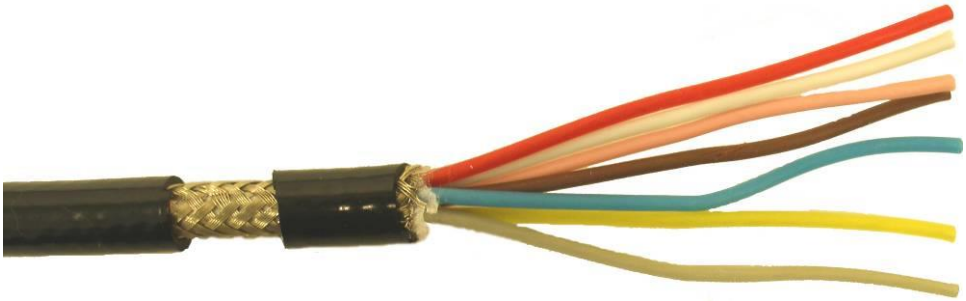

Figure 38 Detector cable, stripped.

2. Feed the cable through a metal EMC gland, e.g. Lapp Kabel Skintop MS-SC-M-XL range, ensuring that the metal prongs make contact with the exposed cable screen as shown below

Figure 39 Detector cable, EMC Gland assembly

3. Connect cable via the relevant Detector position hole in the Junction Box.

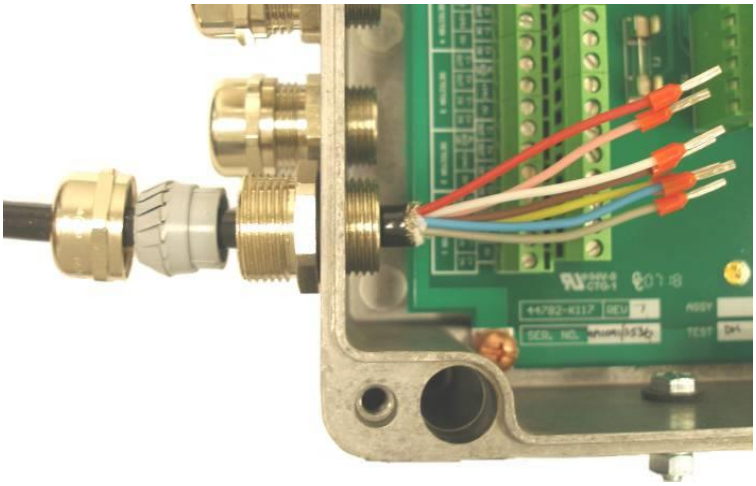

Figure 40 Detector cable, EMC Gland & Junction Box

4. Connect the wires in to the Junction Box terminals as detailed in the table below and tighten the gland.

Connector Pin No.	Colour of wire	Function	Last Detector Function
1	Pink	Comms Out -	TB10 EOL-
1	White	Comms In -	C- in
2	Yellow	Comms In+	C+ in
2	Brown	Comms Out +	TB10 EOL+
3	Grey	Backup Alarm	Alarm Back-up
5	Blue	0v supply	0V
6	Red	24v supply	+24V
Centre	Screen	Cable screen	Cable screen

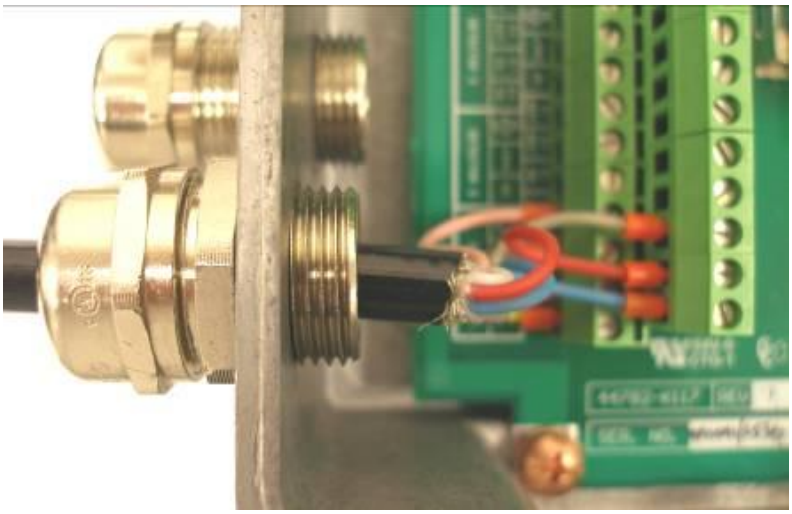

Figure 41 Close-up of Detector cable, EMC Gland assembly

5. Locate and tighten the collar of the connector to the top of the Detector.

Figure 42 Connection to the Detector Head Assembly.

2.2.5 Backup relay connection in the Control Unit.

The connection to the Backup Alarm relay can be made using a screened cable. The screen of the cable being terminated inside a metal EMC gland, e.g. Lapp Kabel Skintop MS-SC-M-XL range, ensuring that the metal prongs make contact with the cable screen. See Figure 26.

2.3 SYSTEM CHECKS PRIOR TO SWITCHING ON

2.3.1 Setting Detector Address

Correct operation of the system depends on all Detector heads being correctly addressed.

This is carried out after installation (refer to Figure 43).

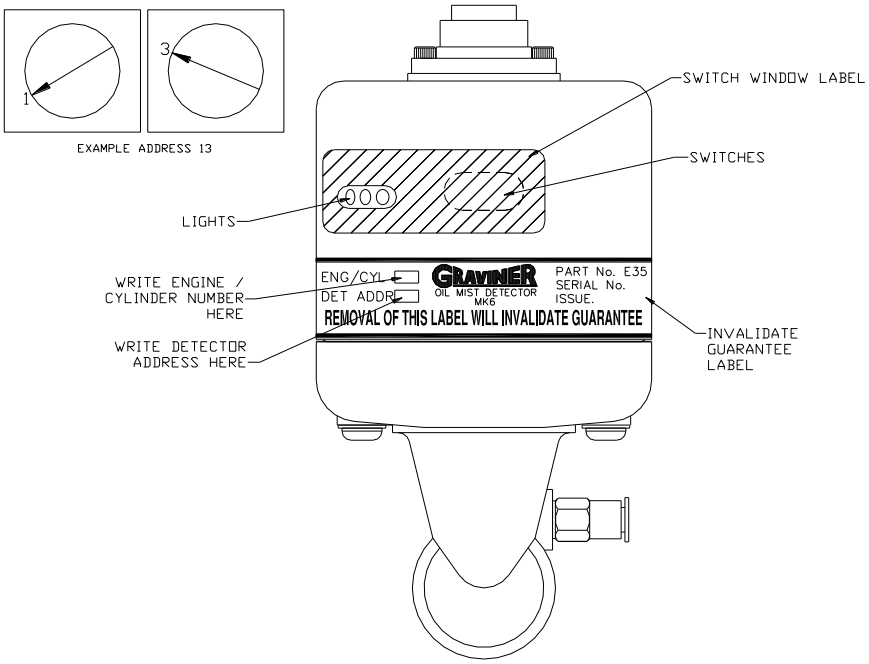

Figure 43 Detector Head 1-E3561-301

1. Remove the adhesive label covering the access port to the address switches.
2. Use an instrument screwdriver to set the switches.

   The left-hand switch sets the TENS, the right hand switch sets the UNITS.
3. Detectors are supplied with the switches set to 00 as factory default.
4. The Detector addresses must be sequential and should run in sequence from engine to engine, i.e. if the last Detector head on the first engine is address 08, then the first Detector head on the second engine must be 09. It is essential that if Detector heads are removed for overhaul they are returned to their original position or they must be re-addressed.
5. Clean the Detector head in the area around the address switches and indicator lights with wet and dry wipes to ensure any oil or grease is removed. Attach the switch window label so that both the indicator lights are visible through the clear window and the switches are covered by the opaque area. Ensure the label is fully adhered to maintain the IP65 rating of the Detector and the product guarantee.
6. The engine/cylinder number and address should be written on the invalidate guarantee label in the position shown.

2.3.2 Check that the Detector addressed 01 is connected to the Detector 1 position in the Junction Box, and the Detector addressed 02 is connected to the Detector 2 position in the Junction Box etc. **Ensure that the pink and brown wires from the last Detector are connected in to the EOL terminals in the Junction Box.**

2.3.3 Ensure that the Communication and Junction Box power supply cables are connected correctly at the Junction Box (refer to section 2.2.3).

2.3.4 Check the cable run of the Communication and Junction Box power supply cables back from the Junction Box to the Control Unit to ensure that they are not damaged.

2.3.5 Ensure that the Communication and Junction Box power supply cables are connected correctly at the Control Unit.

2.3.6 Ensure that the Engine Slowdown/Shutdown, Main Alarm and Fault Alarm relays are connected correctly at the Control Unit.

2.3.7 Ensure that the supply input cables are connected correctly to the Control Unit (refer to Figure 25).

2.3.8 Ensure that the input voltage at the Control Unit is a clean 24 V dc +30%, - 25%

2.3.9 Check the location and function of the main controls on the front of the Control Unit (refer to Figure 5).

2.3.10 When all of the above have been checked and are satisfactory the system is ready to switch on.

2.3.11 Allow 20 minutes for the system to reach it's normal working temperature before continuing to system configuration and commissioning.

2.4 SYSTEM CONFIGURATION AND COMMISSIONING

2.4.1 Initial Actions and Settings

1. After switch on, the Control Unit display shows the message SCANNING FOR DETECTORS. Followed by a flashing COMMS FAULT message. The green LED's on the Detectors illuminate.
2. Press ACCEPT to silence the audible alarm. The COMMS FAULT continues to flash. Select MAIN MENU use the cursor to highlight ENGINEER. Press ↵.
3. The display calls for a password. Enter the default password 012345 press ↵. The display shows MAIN MENU ENGINEER. Use the cursor to highlight option 1 CONFIGURE SYSTEM. Press ↵

2.4.2 Setting Engine Details

1. Select ENGINEER MAIN MENU, followed by CONFIGURATION SYSTEM and ENGINE/DETECTOR
2. In ENGINE/DETECTOR CONFIGURATION enter number of Engines. Press ↵.
3. Select each Engine in turn using the ▲ and ▼ navigation keys.
4. For each engine enter the number of Detectors. Press ↵ after each entry.
5. Press ← to return to configuration menu,

Attribute	Default	Range
Number of engines	1	User selectable - 1 to 8
Number of Detectors	4	User selectable - 1 to 64
Detectors per engine	4	User selectable - 1 to 14

6. Select SET ENGINE NAME. Select engine 1(2, 3, 4, etc) press ↵
7. Enter engine description letter by letter using the ▲/▼ keys to sequence through the alphabet and the ◄/► keys to move to the next letter Press ↵ store the name. Press ← to return to engine description page and select NEXT ENGINE.
8. Repeat this section to name all configured engines.

2.4.3 Setting Alarm Levels

Prior to taking oil mist level measurements the Detector temperatures should be allowed to stabilize to the engine room temperature, this may take approximately 20 minutes.

The system is supplied with default alarm settings for both average and deviation alarms. These are based on past experience and allow the system to operate initially and gather data from the engines being monitored. To enable the alarm settings to be matched to the individual

engines, the actual oil mist density readings should be taken from each engine after it has been operating at full load and reached maximum operating temperature. This could take up to 2 hours.

Prior to operating the engine all stored oil mist levels must be cleared.

1. The test readings for the Detectors should be cleared. This is done in the **ENGINEER MAIN MENU** then **CONFIGURATION** and then '**CLR PEAK AND AVERAGE'**.
2. Clear '**MAXIMUM ACTUAL AVERAGE'** for each engine to ensure all test readings are erased. This can be done in the **ENGINEER MAIN MENU** then **CONFIGURATION** and then '**CLR MAXIMUM AVERAGE**'.

The above should be carried out for all engines being monitored. This should also be carried out after any smoke testing.

Alarm Type	Default Settings	Range
Deviation	0.3 mg/l	0.05 to 0.5 mg/l
Average	0.7 mg/l	0.3 to 1.3 mg/l
Back-up	1.6 mg/l	Fixed

2.4.4 Average Alarm

1. Enter **MAIN MENU** and select **ENGINEER/SYSTEM STATUS**.

   Select **ENGINE 1**(2, 3, 4, etc). **SYSTEM STATUS ENGINE 1**(2, 3, 4, etc) shows.
2. Read **MAXIMUM ACTUAL AVERAGE** value (retain this value for deviation alarm setting).
3. Set **AVERAGE ALARM LEVEL** to a maximum of twice the **MAXIMUM ACTUAL AVERAGE**, as follows:

   Return to the **CONFIGURATION MENU**, select 3, **ALARM LEVELS**, Select **SET AVERAGE ALARM**. Select engine number, press ↵ Enter the new alarm level, as calculated from above.
4. Repeat steps 1 to 4 for all engines.

2.4.5 Deviation Alarm

Have the **MAXIMUM ACTUAL AVERAGE** for each engine to hand as used in setting the **AVERAGE ALARM** (from step 2. in para 2.4.4 above).

Enter **MAIN MENU** and select **ENGINEER MAIN MENU**. Enter the password, Press↵

1. Select **SYSTEM STATUS** followed by **DETECTOR**, Select **DETECTOR STATUS**, Select engine 1 then select Detector 1 (2, 3, 4, etc.) in turn and read the **MAXIMUM PEAK LEVEL** on each Detector. Subtract the **MAXIMUM AVERAGE LEVEL** for that engine from each of the **DETECTOR PEAK LEVELS** and multiply each result x 2. This becomes the **DEVIATION VALUE** entered into the Control Unit. **DEVIATION VALUE** = 2 x (Detector **MAXIMUM PEAK LEVEL** minus engine **MAXIMUM AVERAGE LEVEL**).
2. If the **DEVIATION VALUE** calculated is less than 0.05, enter 0.05.
3. If the **DEVIATION VALUE** calculated is greater than 0.5, enter 0.5
4. Repeat for each engine by using ← key to return to **DETECTOR STATUS** menu.
5. Use ← key to return to **CONFIGURATION MENU**. Select **ALARM LEVELS**.
6. Select **DEVIATION ALARM**. Select engine 1, (2, 3, 4, etc). Enter new **DEVIATION ALARM LEVEL** for each Detector for engine 1. (2, 3, 4, etc)
7. It may become necessary over a period of time that due to changes in the engine's characteristics, the alarm levels need to be readjusted.

2.4.6 Detector Smoke Alarm Test

One of two methods may be used to conduct the smoke alarm test: with the Detector fitted, electrically connected, functioning and configured as described in the instruction manual.

Method 1 – Using a Wick

a. Cut a length of wick approximately 30 mm long. Assemble the smoke tester by pushing the wick into the wick holder fitted with the pipette bulb. Press the nylon pipe into the Pipe connector (refer to Figure 44).

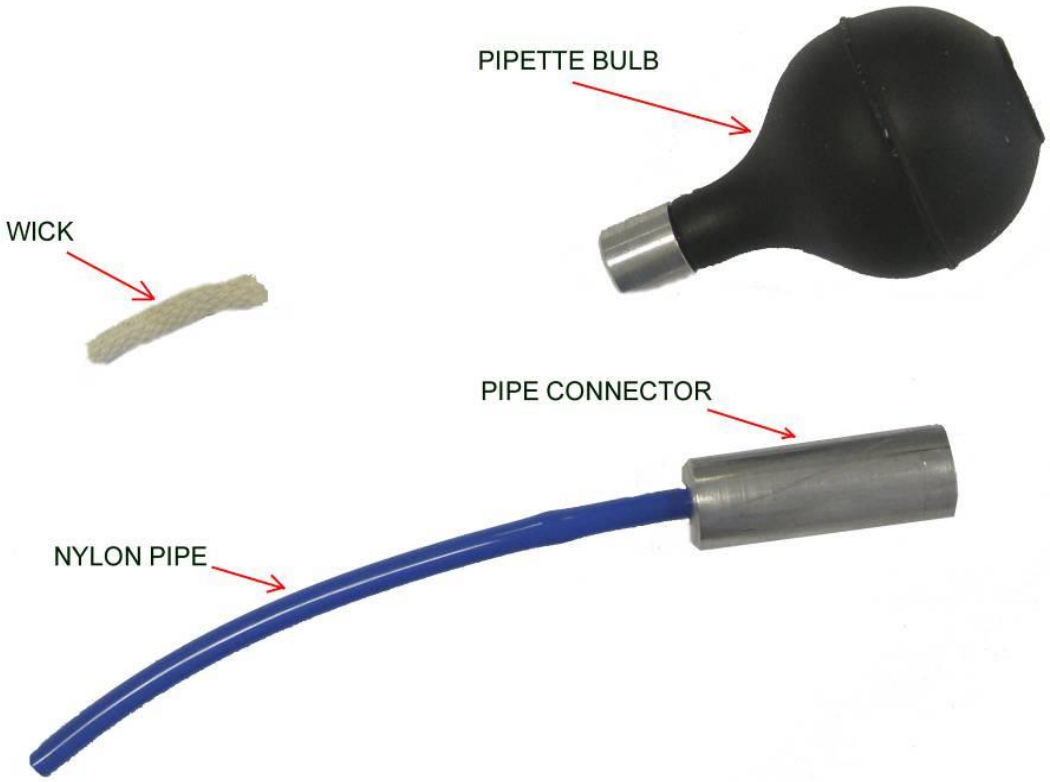

Figure 44 Smoke Tester

b. Push the nylon pipe of the smoke tester into the connector on the side of the Detector base body (refer to Figure 45).

Figure 45 Smoke Test

c. Dip the wick into the bottle of smoke oil and reseal the bottle firmly

   Note: Only a small quantity of oil is required.

d. Ignite the wick of the smoke tester and blow out the flame. Squeeze the pipette bulb to keep the wick smoking.

   Note: Care to be taken with this activity at all times.

e. While the wick is still smouldering, insert it into the pipe connector and squeeze the pipette bulb.

f. Observe the wick is still smouldering, insert nylon pipe into the pipe connector of the Detector and squeeze the pipette bulb.

g. After tests are completed the **MAXIMUM ACTUAL AVERAGE**, **DETECTOR PEAK LEVEL** and current **AVERAGE** readings should be erased. This can be done via the Configuration option in the Engineer Main Menu then using **CLR. Maximum Average** and **CLR Peak & Average**.

h. To release the pipe from the connector, press in the blue plastic collar on the end of the connector at the same time as pulling the pipe out

i. Remove the nylon pipe from the pipe connector for stowage purposes.

j. The wick is reusable and can be left in the wick holder. Fully extinguish the wick after use at all times.

k. Refer to the Material Safety Data Sheet in the event of health or safety issues.

Method 2 - Using Artificial Smoke

a. Push the nylon pipe of the smoke tester into the connector on the side of the Detector base body (refer to Figure 45).

b. Using a can of artificial smoke, e.g. Smoke Check smoke Detector tester, spray the artificial smoke in to the nylon pipe.

c. After tests are completed the **MAXIMUM ACTUAL AVERAGE**, **DETECTOR PEAK LEVEL** and current **AVERAGE** readings should be erased. This can be done via the Configuration option in the Engineer Main Menu then using **CLR. Maximum Average** and **CLR Peak & Average**.

d. To release the pipe from the connector, press in the blue plastic collar on the end of the connector at the same time as pulling the pipe out

e. Remove the nylon pipe from the pipe connector for stowage purposes.

f. Refer to the Material Safety Data Sheet in the event of health or safety issues.

Method 2 is recommended in situations where the use of a naked flame would be hazardous.

2.4.7 Backup Alarm

The Back-up Alarm is a hard wired link from each Detector installed on the system. This facility will allow any Detector which is in a fault condition and sees an oil mist level of 1.6mg/l or greater to produce a ‘Backup Alarm. This will produce operation of both the Backup alarm relay in the Junction Box and the main alarm relay in the Control Unit, the Backup alarm will also override any Detector or Detectors that are isolated.

Whilst any Detectors are in a Backup Alarm condition the Accept key is inoperative until the oil mist level drops below 1.6mg/l.

It is possible for a healthy Detector to produce a backup alarm if the level of oil rises very rapidly.

2.4.8 System Access Password

Access to the system is at three levels: User

Engineer

Service

The User access level allows for READ only. No adjustments are possible but all data and settings can be read.

The Engineer access level is password protected and allows the system to be configured and read. It also allows the alarm settings to be adjusted. The system is supplied with a default password, but it can be altered to suit individual operators. The default password will always remain active for emergency.

The Engineer access level, when selected, a prompt for a password will appear. Enter 0.1,2,3,4,5, then press ↵

2.4.8.1 To change the password proceed as follows:

1. Press **MAIN MENU** and then select **ENGINEER**. Enter default password, select **1, CONFIGURE SYSTEM.**
2. In configuration menu select 5, **SET PASSWORD**.
3. In set **PASSWORD MENU**, select **SET ENGINEER PASSWORD**.
4. Enter new password, (min 2 digits, max 6 digits) press ↵ enter new password again to confirm and press ↵ key.
5. The new password is now active.

2.4.9 The Service access level is also password protected and access is for authorised service agents of UTC Fire Protection only.

2.5 SYSTEM OPERATION

2.5.1 Action on Alarm

On receipt of either a **Deviation** or **Average** alarm the engine should, unless connected to a Slowdown / Shutdown relay, be stopped if safe to do so and allowed to cool down so that the background oil mist levels reduce before entering the engine room. Investigations can then be carried out to identify and rectify the cause of the alarm. Once the fault in the engine has been rectified the OMD system can be re-set and the display returns to the normal mode.

When a system fault alarm is received, the information on the display should be noted and then the appropriate fault finding procedure in Chapter 4 of the manual should be consulted to enable the fault to be rectified.

Note: When the engine is started from cold in Arctic/Antarctic conditions, a water mist can be produced that could give a false alarm.

Alarm and fault messages have an associated priority. These are detailed below:

Message	**Priority**
Alarm	Highest
Comms. fault	2nd highest
Sensor fault	3rd highest
System fault	4th highest

All events are stored in the alarm/fault queue in order of occurrence. The user can scroll through the queue by use of the arrow keys.

Once an event is active the event is displayed on the LCD in the appropriate format. To clear the display press the **ACCEPT** key. Once the **ACCEPT** key is pressed, the display shows the **ENGINE AVERAGES** display.

When an alarm condition exists, the following warning message is displayed regardless of other information on the display (i.e. alarm events have the highest priority): **DEVIATION ALARM.**

2.5.2 System Status

2.5.2.1 Engine Status

This menu will show the **average alarm level** as set in the engineer configuration menu, the **maximum average level** that has been reached, if the engine slow down relays and engine are isolated, if the engine system has any general faults and finally the number of Detectors configured for this engine.

2.5.2.2 Detector Status

This menu permits the following information for each Detector to be read :-

- Detector status including peak level of oil mist in mg/l.
- The Deviation Alarm level.
- If the Detector is Isolated.
- If the Detector has a Communication Fault, Fan Fault, LED Fault watch dog or Address Fault. Plus the zero offset values per Detector.

2.5.3 Isolation

If required it is possible to isolate any individual Detector, all Detectors on a complete engine or the engine slow down relays. This allows maintenance to be carried out without affecting the remaining system. Isolation inhibits all alarms and faults for the isolated item except the Backup Alarm, which is a fixed level.

<u>Engine Isolation</u>

To isolate all of the Detectors on one particular engine, access the **MAIN MENU** and select **ENGINEER**. Enter either the default password or own unique password if this option has been used.

1. When in the engineer menu, press key number 3 to highlight **ISOLATE** and then press the ↵key.
2. Once in the isolate menu, select **1 ENGINE**, press the ↵key and the display will show the number of engines configured with the word **DE-ISOLATED** beside each one.
3. Using the ▲ and ▼ keys, highlight the engine required and press the ↵ key.
4. The display will show the engine selected with the words **DE-ISOLATION - ISOLATE** beside it.
5. Press the ► key to highlight ISOLATE and press the ↵ key.
6. The display reverts to showing the number of engines configured, but the selected engine will have the word **ISOLATED** flashing beside it instead of **DE-ISOLATED**.
7. The three lights marked **ISOLATE, DETECTOR ISOLATE** and **ENGINE ISOLATE** all come on.
8. To de-isolate, repeat the above until you reach the display that shows **DE-ISOLATION - ISOLATE** (step (4)) beside the selected engine and as DE**-ISOLATED** is highlighted press the ↵ key and the Detectors on the engine return to normal operation.
9. To return to the normal menu press the ← key once and then the **MAIN DISPLAY** key.

Detector Isolation

To isolate a Detector, access the Engineer menu and then the isolate menu as above

1. When in the isolate menu press the ▼ key and press the ↵ key.
2. The display will show the number of engines configured.
3. Using the ▲ and ▼keys highlight the engine on which the Detector is to be isolated and press the ↵ key.
4. The display changes to show the number of Detectors configured on the selected engine with the word **DE-ISOLATED** beside each Detector.
5. Using the ▲ and ▼keys highlight the Detector to be isolated and press the ↵ key.
6. The words beside the Detector selected will change to **DE-ISO ISO**.
7. By using the ► key, highlight **ISO** and press the ↵ key.
8. The display returns to show all Detectors with the word **ISOLATED** flashing by the selected Detector. All other Detectors still have the word **DE-ISOLATED** beside them.
9. The **ISOLATE** and **DETECTOR ISOLATE** lights will come on.
10. To de-isolate the Detector ensure this Detector is highlighted and press the ↵ key to return to the display showing **DE-ISO ISO** and, as **DE-ISO** is highlighted, press the ↵ key again and the screen returns to showing all Detectors de-isolated and the lights will go off.
11. To return to the normal screen, press the ← key once and press the **MAIN DISPLAY** key.

Slowdown / Shutdown Relay Isolation

To isolate a Slowdown / Shutdown relay, access the Engineer menu and the isolate menu as above.

1. In the isolate menu select **3 RELAY** and press the ↵ key.
2. The display shows the number of engines configured with the word **DE-ISOLATED** beside each one.
3. Highlight the engine of which the relay is to be isolated by use of the ▲ and ▼keys and press the ↵ key.
4. The display shows **DE-ISOLATION ISOLATE** beside the engine selected.
5. Press the ► key to highlight **ISOLATE**.
6. Press the ↵ key and the display will show **ENGINE 1(2-8)** with the word **ISOLATED** flashing beside it.
7. The **SLOWDOWN ISOLATE** light and the **ENGINE ISOLATE** lights come on.
8. To return the relay to normal operation, press the ↵ key whilst the display is showing the engine number and the word **ISOLATED** is flashing.
9. The display shows **ENGINE 1(2-8) DE-ISOLATION ISOLATE**. Press ↵The display shows **ENGINE 1(2-8) DE-ISOLATED** and the two lights will go out.
10. Press the **MAIN DISPLAY** key to return to the **NORMAL** display.

2.6 TEST MENU

Press the TEST key pad on the Control Unit. The TEST MENU appears, with this menu selected eight more menu options appear on screen as follows: (the eighth option is only available through the Engineer Menu.)

1. Alarm Relay Checks the correct operation of the main alarm relay

2.	Fault Relay	Checks the correct operation of the fault relay.
3.	System Test	Checks the correct operation of the system software. (Test disabled)
4.	LED/LCD Test	Checks all of the lights and all segments of the LCD on the Control Unit and also the internal sounder.
5.	Back-up Alarm	Checks the Back-up alarm connection from each Detector causing the switching of the internal sounder on & off once for each Detector
6.	Optics	Checks the output from the Detector light array to ensure it is within limits.
7.	Detector Alarm	Simulates a deviation alarm without operating the slowdown / shutdown relay.
8.	Slowdown / Shutdown Relay	Checks the correct operation of the slowdown relay. (Only available in password protected screen).

Warning: **Carrying out test 8. with the engine operating will cause the engine shut/slow down system to operate if connected.**

2.6.1 Alarm Relay

1. Press the **TEST** key pad on the Control Unit. The **TEST MENU** is displayed, defaulting to No.1 **ALARM RELAY**.
2. Press ↵ key.
3. Display changes to: **ALARM RELAY TEST**

   TEST ALARM RELAY

   DISABLE ENABLE

   Note: **DISABLE** will be highlighted.
4. Press ► key to highlight **ENABLE**.
5. Press ↵ key and observe:
   a. The display returns to the test menu.
   b. The **TEST** light on the Control Unit comes on.
   c. The main Alarm Relay operates. This is confirmed by any audible and visual alarms operating that are connected to this relay.
6. To cancel the alarm:
   a. Ensure **ALARM RELAY** in the test menu is highlighted.
   b. Press ↵ key.
   c. Display changes to that shown in para 2.6.1 step (3) above with **DISABLE** highlighted.
   d. Press ↵ key again and the alarm will reset and the display will return to the test menu.
7. When testing of the Alarm Relay is complete either; Press the **MAIN DISPLAY** key on the Control Unit to return to the normal display, or select another test option.

2.6.2 Fault Relay

1. Press the **TEST** key pad on the Control Unit. The **TEST MENU** is displayed, defaulting to No.1 **ALARM RELAY**.
2. Press key pad No. 2 or the ▼ key to highlight No.2 **FAULT RELAY**
3. Press the ↵ key.
4. The display changes to:

   FAULT RELAY TEST

   TEST FAULT RELAY

   DISABLE ENABLE

   Note: **DISABLE** will be highlighted.
5. Press the ► key to highlight **ENABLE**.
6. Press ↵ and observe:
   a. The display returns to the Test Menu,
   b. The **TEST** light on the Control Unit comes on.
   c. Fault relay changes state. This is confirmed by any audible and visual alarms operating that are connected to this relay.
   d. To cancel the alarm repeat para 2.6.2 steps 2 & 3 above and then press the key again.
7. When testing of the Fault Relay is complete, either; Press the **MAIN DISPLAY** key to return to the normal display or select another test option.

2.6.3 System Test

Note: This test no longer performs a function within the Control Unit.

Selection of this test option will return the user to the test menu.

2.6.4 LED/LCD Test

1. Press the **TEST** key pad on the Control Unit. The **TEST MENU** is displayed, defaulting to No.1 **ALARM RELAY**
2. Press key pad No. 4 or the ▼ key 3 times to highlight No 4 **LED/LCD TEST**.
3. Press ↵ and observe:
   a. All of the lights on the Control Unit come on.
   b. Horizontal bars scroll down the display.
   c. The following appears on the display after the bars scroll down

      LCD AND LED TEST

      OIL MIST DETECTOR MK6

      VERSION: 1-P57100-11*

      (*Will depend on the software version fitted).
   d. The internal sounder operates for approximately 5 seconds.
   e. All lights except for the green POWER ON light go out.
   f. The display returns to the test menu.
4. This test is now complete. The operator can now either: Press the **MAIN DISPLAY** key to return to the normal display, or select another test option.

2.6.5 Backup Alarm

1. Press the **TEST** key pad on the Control Unit. The **TEST MENU** is displayed, defaulting to No.1 **ALARM RELAY**.
2. Press key pad No. 5 or the ▼key four times to highlight No. 5 **BACK-UP ALARM**.
3. Press ↵ and check that the internal sounder operates the same number of times as there are Detectors fitted to the system and the display shows **BACK-UP ALARM ACTIVE.**

   Note: If the system has 6 Detectors fitted then the internal sounder operates 6 times.

   The state of the common alarm relay in the control panel or the back-up alarm relay in the junction box is not affected by this test.
4. When the test is complete the display will return to the test menu.
5. This test is now complete. The operator can now either: Press the **MAIN DISPLAY** key and return to the normal display or select another test option.

   This test is automatically performed every 24 hours at 16:00 with respect to the OMD Control Unit clock.

2.6.6 Optics Test

1. Press the **TEST** key pad on the Control Unit. The **TEST MENU** is displayed, defaulting to No.1 **ALARM RELAY**.
2. Press key pad No. 6 or the ▼ key five times to highlight No. 6 **OPTICS**.
3. Press ↵ and the display changes to:

   TESTING OPTICS . PLEASE WAIT
4. Approximately 3 seconds after the test is initiated the internal sounder will operate for 1 second.
5. After approximately 25 seconds, on successful completion of the test, the display will return to the Test Menu.
6. This test is now complete. The operator can now either Press the **MAIN DISPLAY** key and return to the normal display or select another test option.

   This test is automatically performed every 24 hours at 16:00 with respect to the OMD Control Unit clock.

2.6.7 Detector Alarm

1. Press the **TEST** key pad on the Control Unit. The **TEST MENU** is displayed, defaulting to No.1 **ALARM RELAY**
2. Press key pad No. 7 or the ▼ key 6 times to highlight No. 7 **DETECTOR ALARM**.
3. Press ↵ and the display changes to:

   DETECTOR ALARM TEST

   ENGINE 1

   ENGINE 2

   Note: The number of engines shown is dependent on how many are configured up to a maximum of 8. However, ENGINE 1 is highlighted as the default setting.
4. Press ↵ again and the display changes to:

   DETECTOR ALARM TEST

   ENGINE 1 DET. 1 TEST OFF

   ENGINE 1 DET. 2 TEST OFF

Note: The number of Detectors shown will depend on how many are configured up to a maximum of 14 per engine. However, **ENGINE 1 DET. 1** is highlighted as the default setting.

5. Press ↵ again and check the following:
   a. The internal sounder comes on immediately.
   b. The display briefly shows the number of engines configured as in step (3) above.
   c. The red **ALARM** and the **ENGINE ALARM** lights flash and the main alarm relay goes into an alarm condition.
   d. The display shows: **DEVIATION ALARM**
      ENGINE NO DET
      TIME DATE

6. Press the ACCEPT key and observe:
   a. The display changes to the toggling graphics mode.
   b. The red **ALARM** lights both change to a steady state.
   c. The main alarm relay resets.
7. Press the **RESET** key and check:
   d. The display returns to normal.
   e. All lights except the **POWER ON** go out.
8. Repeat the complete test for each Detector that is to be tested. Select the Detector to be tested by use of the ▲, ▼, ◄, and ► keypads.

2.6.8 Slowdown / Shutdown Relay

Warning: Carrying out this test while the engine is running WILL cause it to stop or slow down.

1. Press the Main Menu key on the Control Unit and select **ENGINEER** by using the ▼ down key or the number 2 key.
2. Press the ↵ enter key and enter the password when prompted, when entered press the ↵ enter key again.
3. The display will show 7 menu headings defaulted to No. 1 Configure System. Press the No.4 key or the ▼ down key 3 times to highlight No.4 **TEST**
4. Press the ↵ enter key and 8 test menus will show on the display defaulted to No.1 Alarm Relay. Press the No.8 key or the ▼ down key 7 times to highlight **SLOWDOWN RELAY**
5. Press the ↵ enter key and the display shows the following defaulting to Engine 1 which will be highlighted:

RELAY TEST MENU

ENGINE 1 TEST OFF

Note: The number of engines shown is dependent on how many are configured up to a maximum of 8. However, **ENGINE 1** is highlighted as the default setting.

6. Press the ↵ enter key and the display shows the following, **DE-ACTIVATE** will be highlighted:

RELAY TEST MENU

ENGINE / DE-ACTIVATE ACTIVATE

7. Press the ► right key to highlight Activate and the press ↵ enter key, the display will show the following with the words **TEST ON** flashing.

RELAY TEST MENU

ENGINE / TEST ON

8. The Slowdown relay changes state and all alarms connected to the relay operate, also the test light on the Control Unit comes on.
9. To cancel the alarm press the ↵ enter key and the display will be as step (6) above with **DE-ACTIVATE** highlighted.
10. Press the ↵ enter key again and the display will be as step (5) above and the test light on the Control Unit will go out.
11. Press the ← quit key to return to the test menus or the Main Display and **RESET** to return to the normal display.

2.7 EVENT LOG

2.7.1 The Event Log enables the user to interrogate the past 256 events and can be accessed via the user menu separately.

1. To access the event log press the **MAIN MENU** and when the choice of access levels appears on the screen, **USER** will be highlighted. Press the ↵ key. Press 3 **EVENT LOG** and press the ↵ key. The display will show the last event that has occurred. With ▲and ▼, scroll through the complete event log until the required entry is found.
2. To speed up the search for the required event it is also possible to do so by event type eg. deviation alarm or, if the approximate date of the event is known, a search from time and date is also available in the Event log sub-menu.
3. To return to the normal display press ← key once and then the **MAIN DISPLAY** key.

2.7.2 The event log may also be downloaded onto a computer using the serial link connector on the main processor PCB.

1. Plug serial lead into Com1 on PC and plug in to the round serial connector on the Control Unit.

HyperTerminal Setup

2. From the Windows™ start button choose:

Start -> Programmes -> Accessories -> Communications -> HyperTerminal

3. This should bring up the following box or something similar depending on Windows™ version, Windows XP is shown.

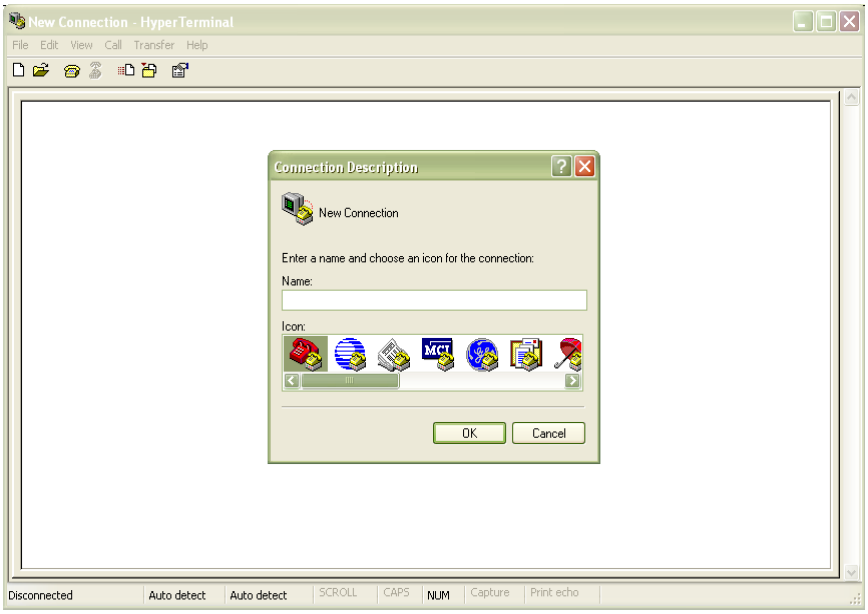

Figure 46 Connection Description Screen

4. Type in a name, e.g. OMD6, and choose one of the icons then click ok.
5. In the 'Connect using:' drop down box select Com 1 and click ok (note if com 1 is being used for another application Com 2 can be selected if the pc has 2 communications ports).
6. This should bring up the following settings screen.

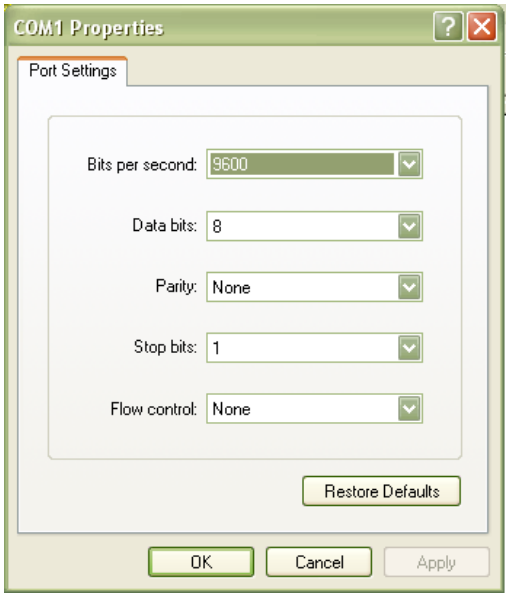

Figure 47 COM1 Properties Screen

a. In bits per second select - 9600
b. Data bits - 8
c. Parity - None
d. Stopbits- 1
e. Flow control - None

7. Then click OK, this connects HyperTerminal to com 1 and will take you back to the main screen.
8. Main Screen which should say connected in the bottom left hand corner.

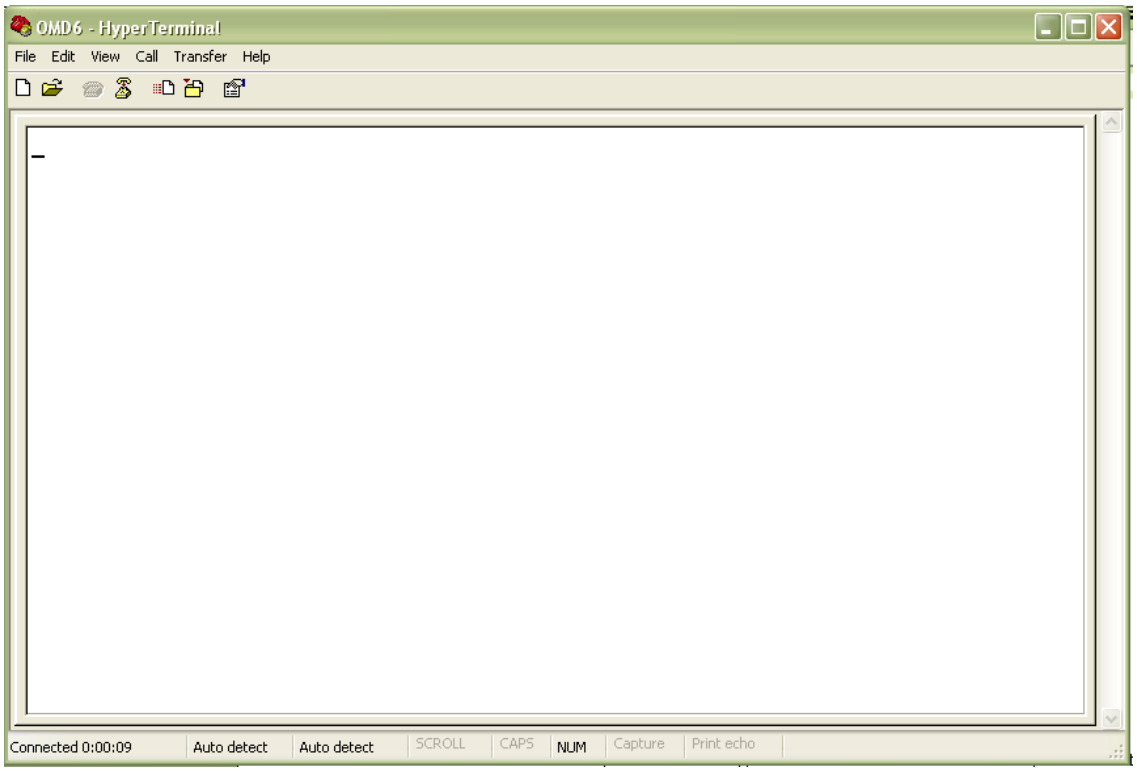

Figure 48 HyperTerminal Screen

9. From the top level menu select Transfer-> Capture text and in the file box type where you want the file to be saved and what name e.g. C:\omd.txt then click on the start button.
10. At the Control Unit, go through the menu structure and choose **Download Event Log**, then select enter. You should now see the event log downloading into the white panel of the above screen.
11. When the event log has finished downloading select Transfer-> capture text -> stop.
12. Then using Word, WordPad or Notepad you can examine the event log by loading up C:\omd.txt.

If you want to do another event log download in the future, launch HyperTerminal from the start bar as normal and in the first screen there should be a new icon called omd6.ht (if that is what you called it). Simply double click on this icon and HyperTerminal will be launched with all the correct settings and the connection to Comm port 1 already established. After that the only thing that needs setting up is the transfer capture to save the event log.

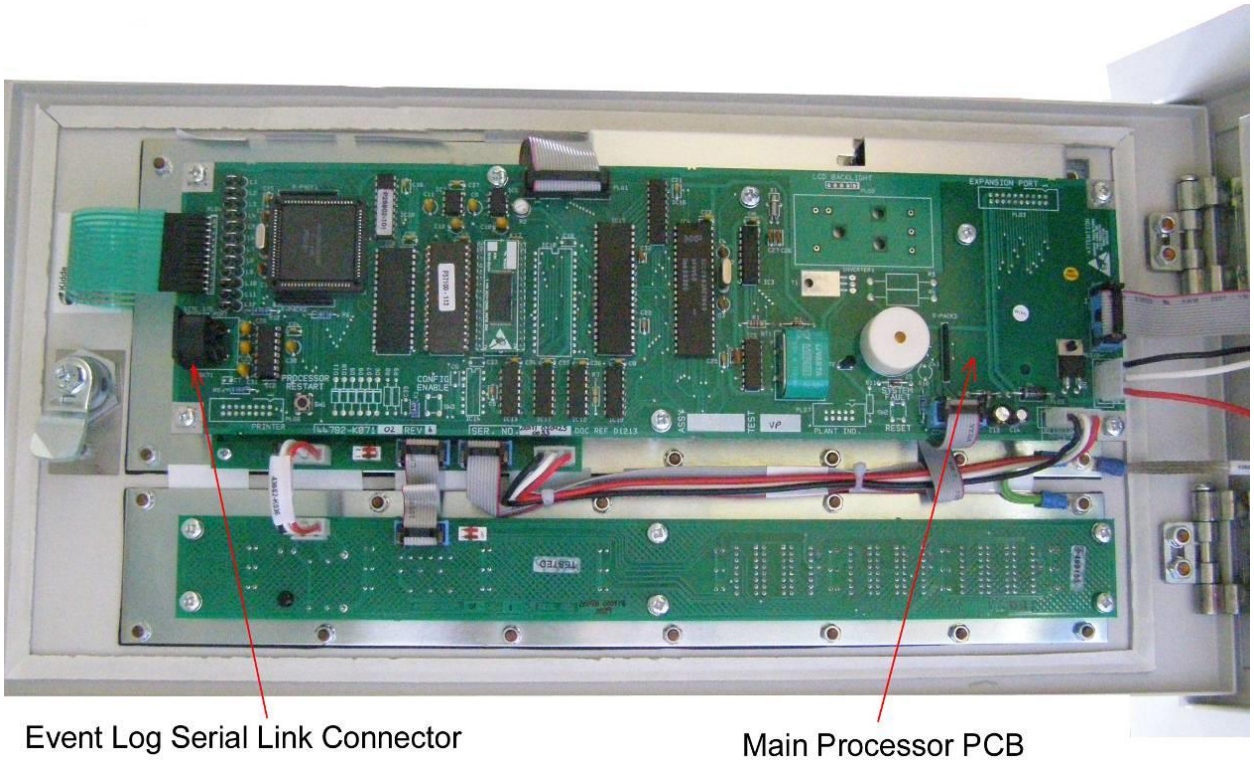

Figure 49 Event Log Connector location

ENGINEER & USER MENU FLOWCHARTS

The following charts show the Engineer and User Menus.

Engineer Menu Sheet 1

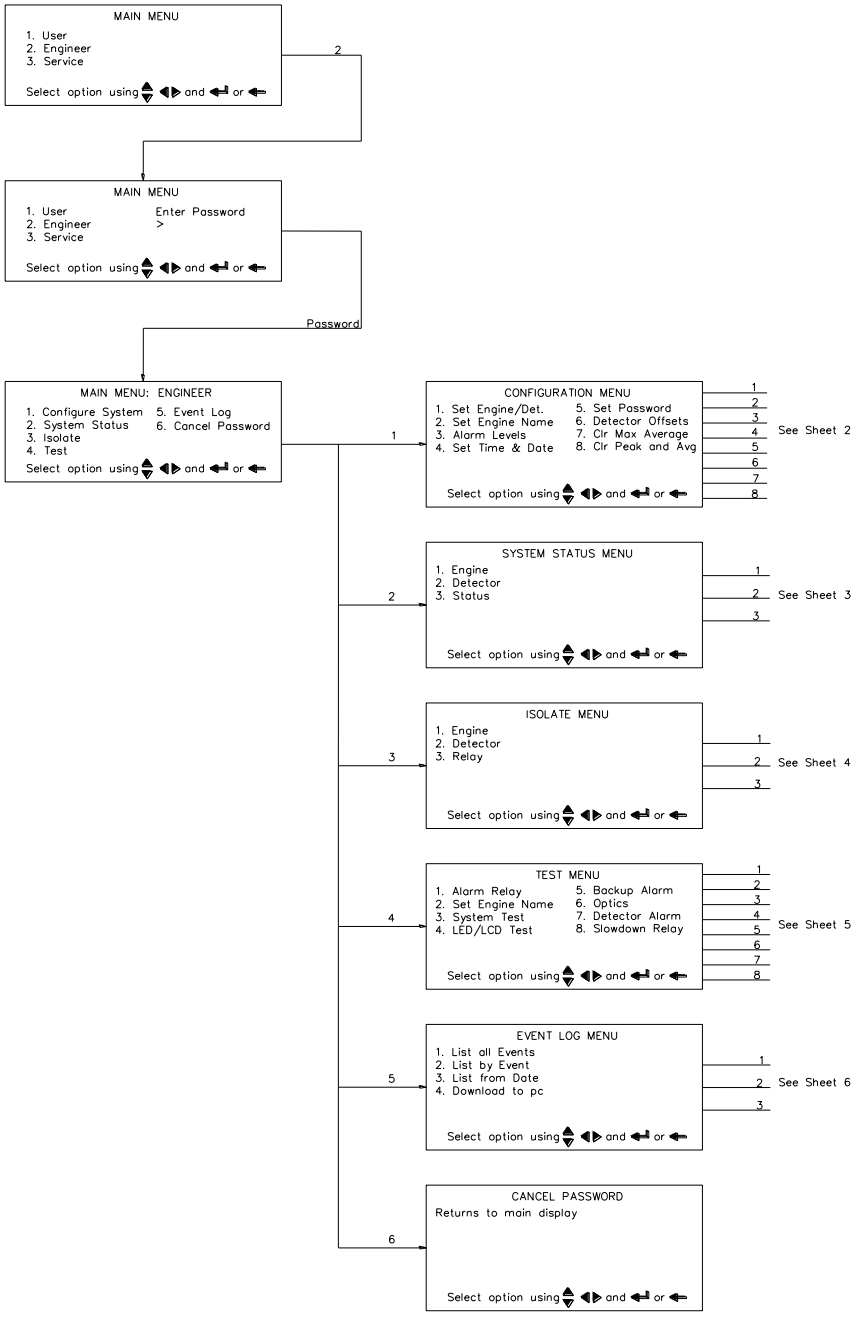

Engineer Menu Sheet 2

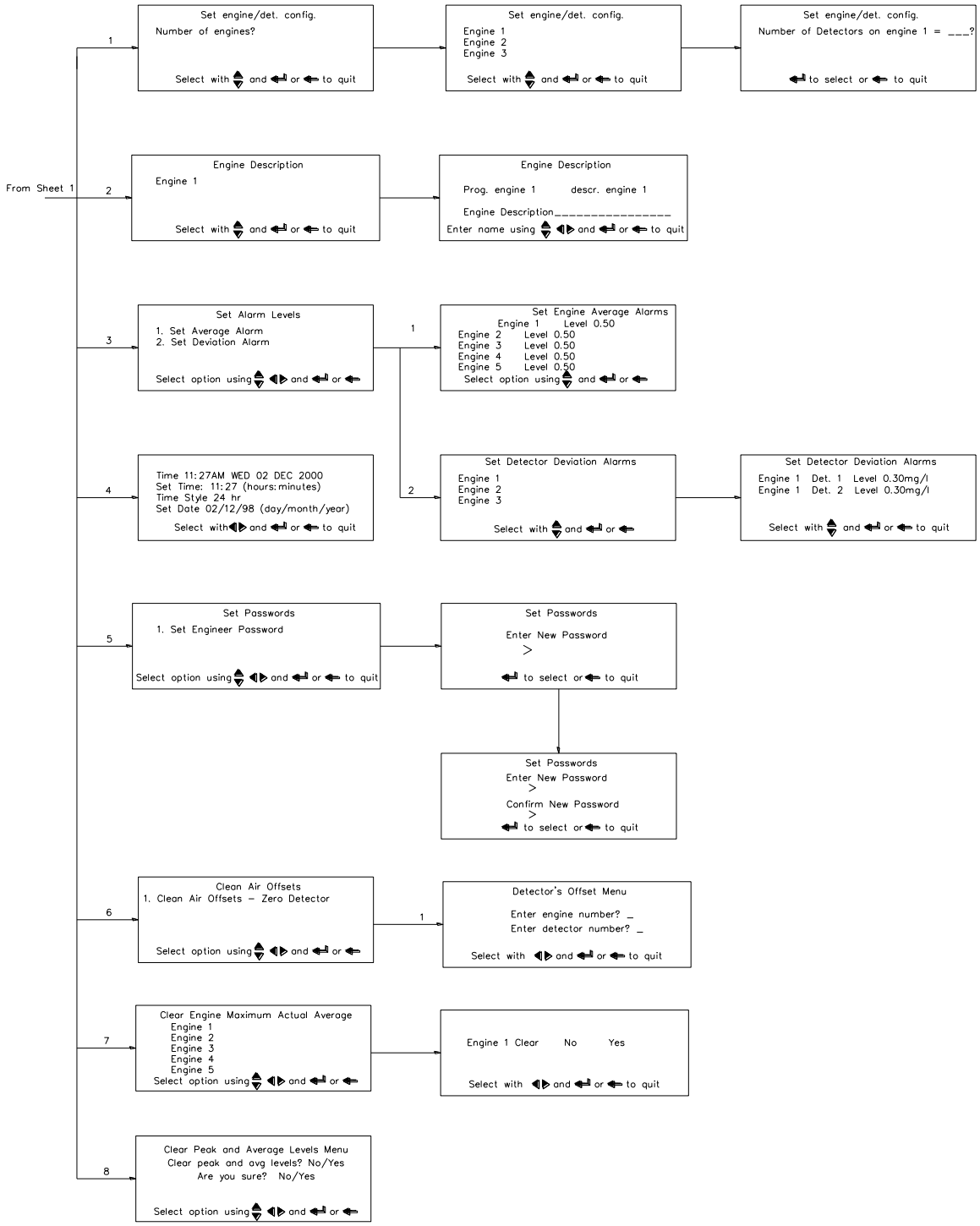

Engineer Menu Sheet 3

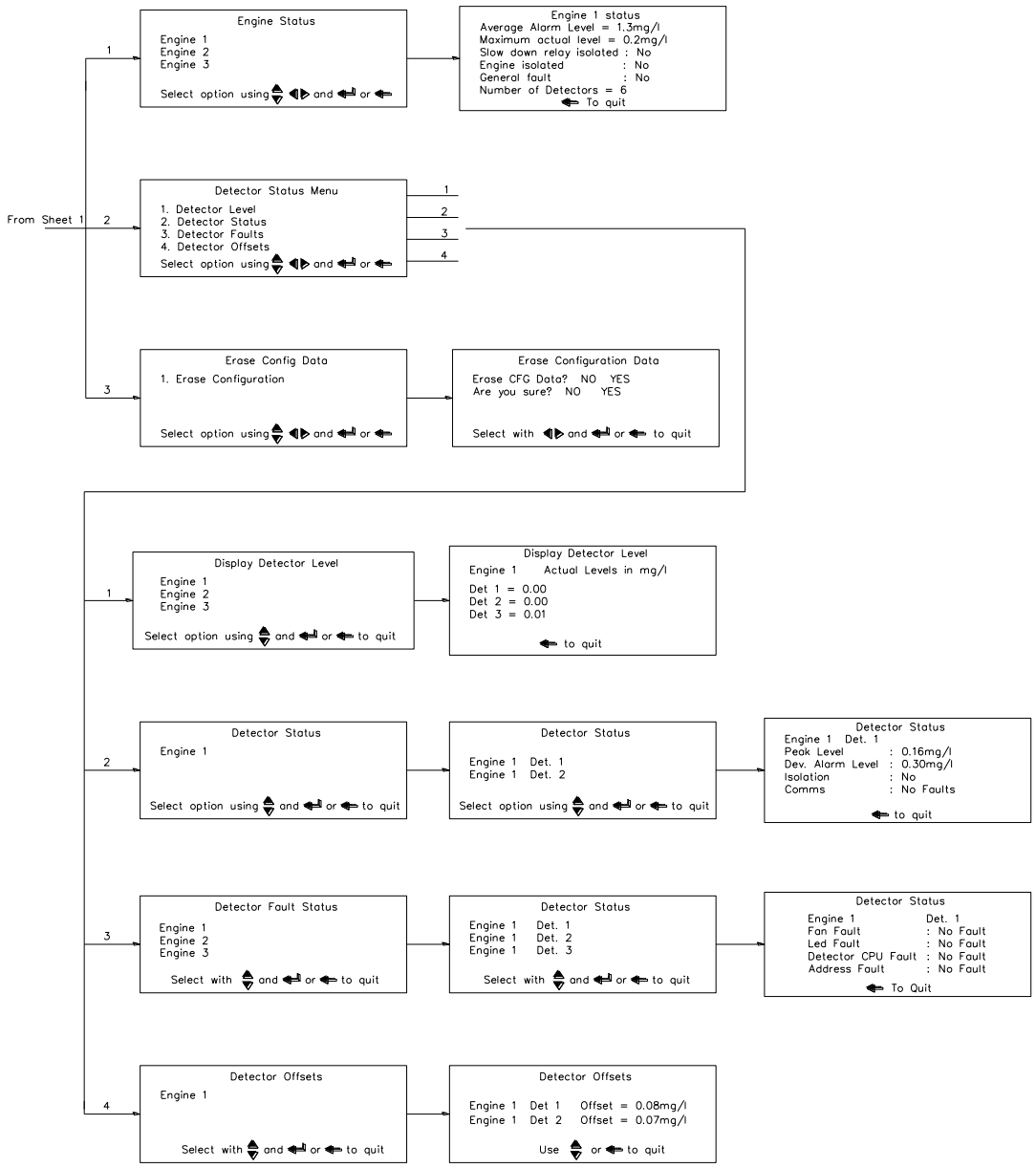

Engineer Menu Sheet 4

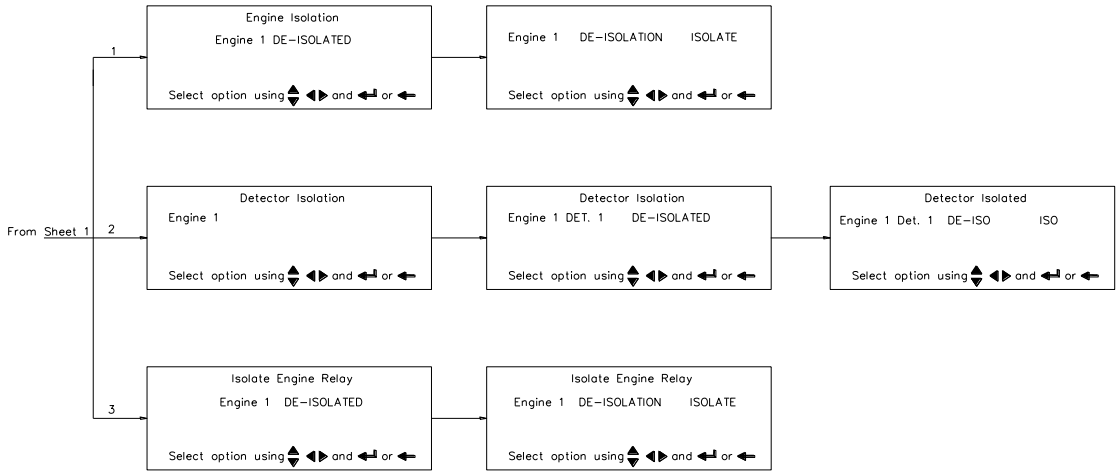

Engineer Menu Sheet 5

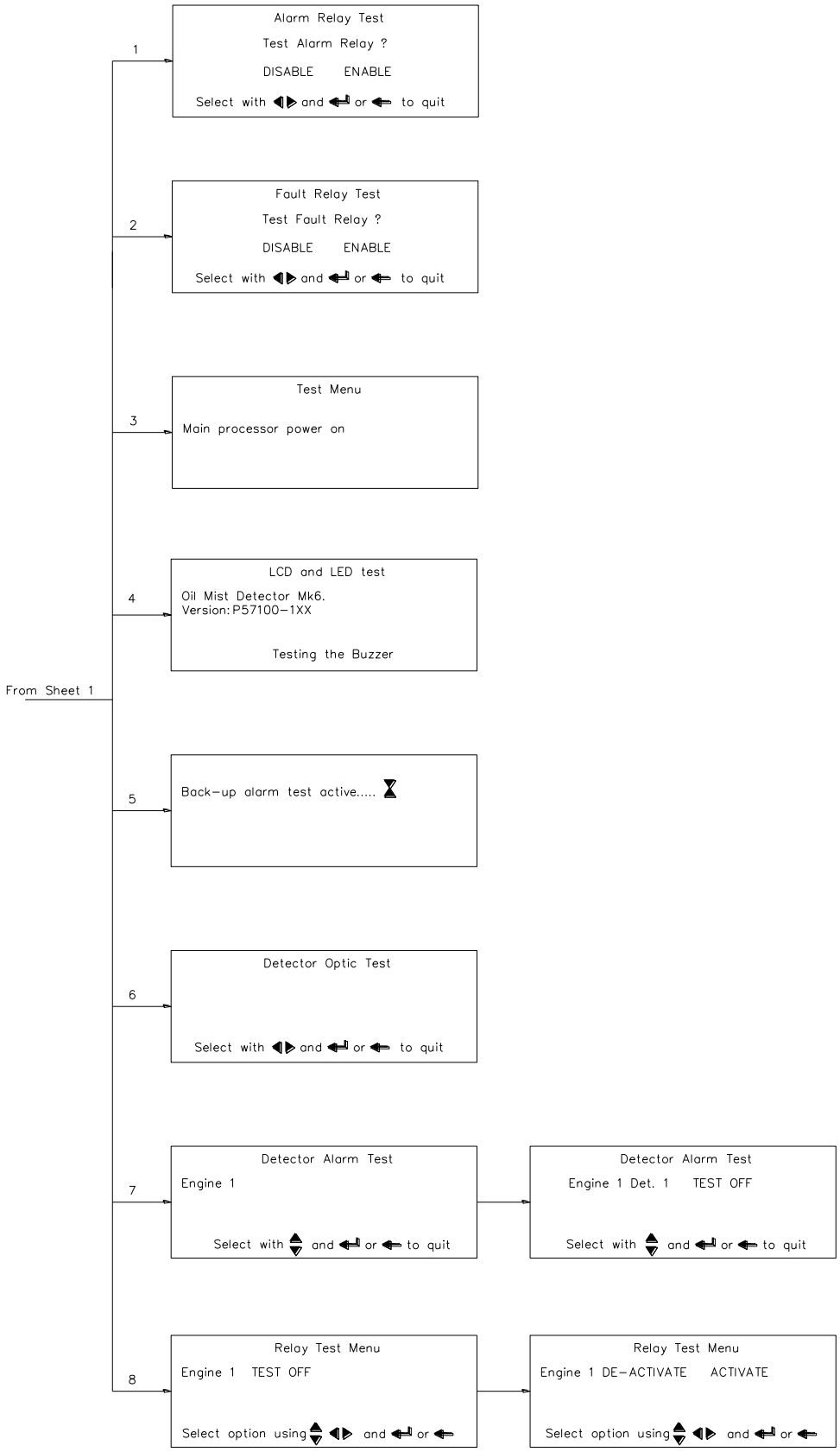

Engineer Menu Sheet 6

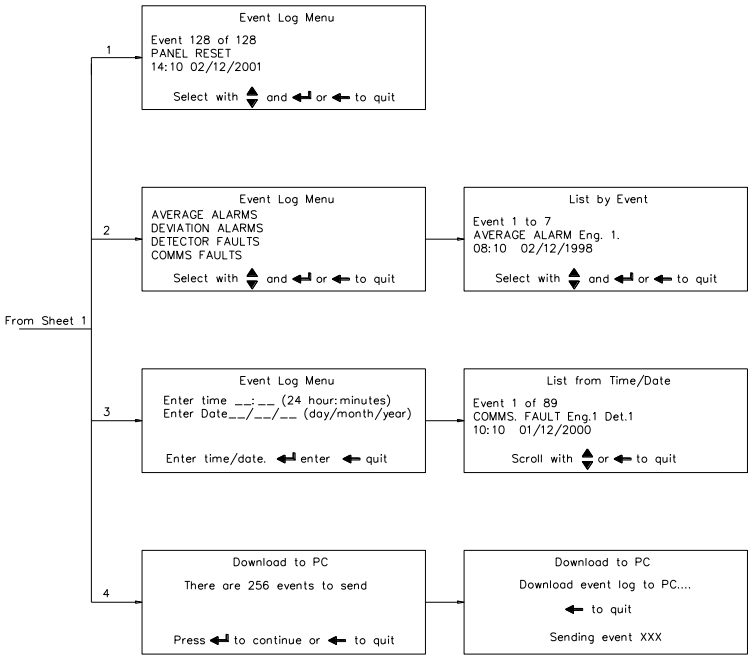

User Menu Sheet 1

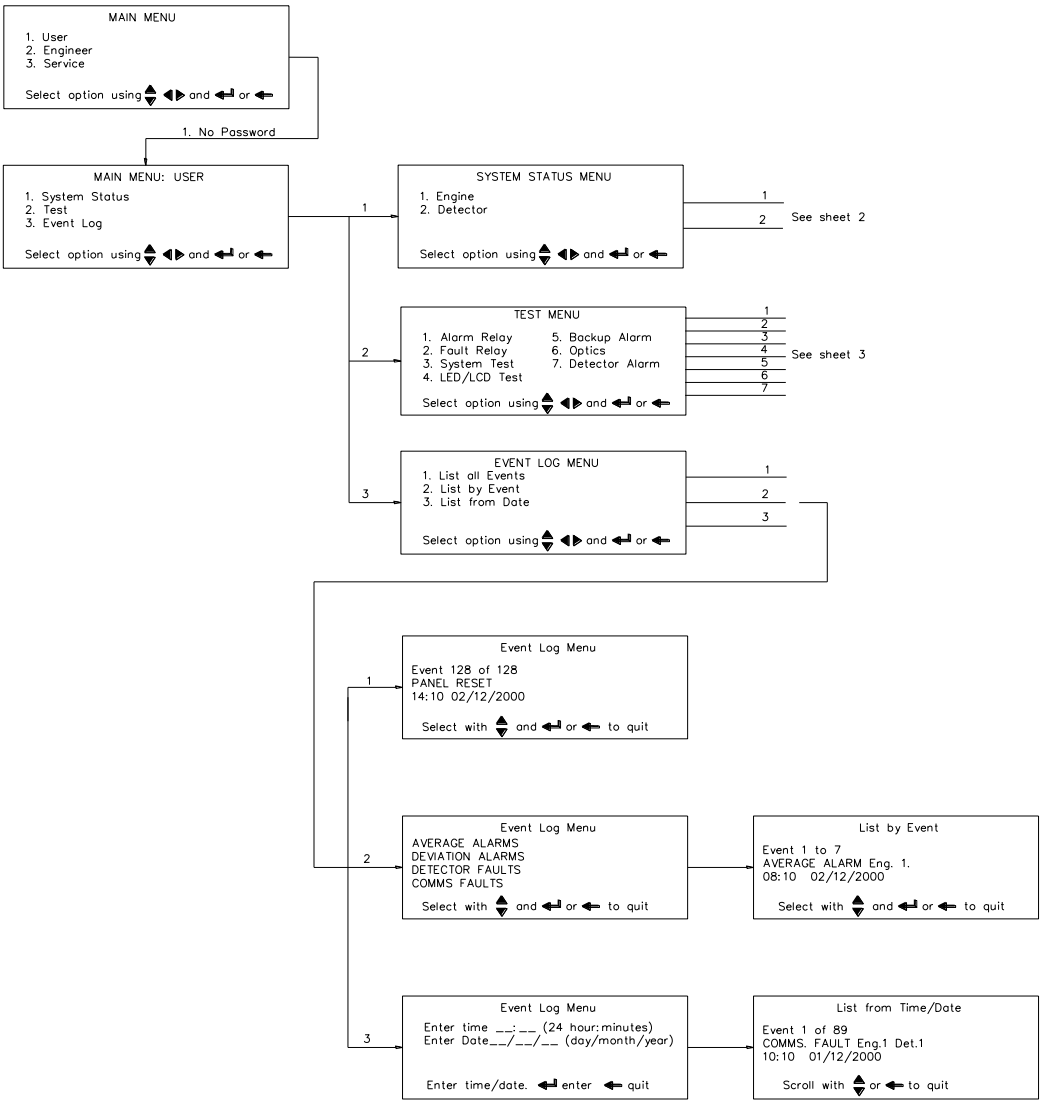

User Menu Sheet 2

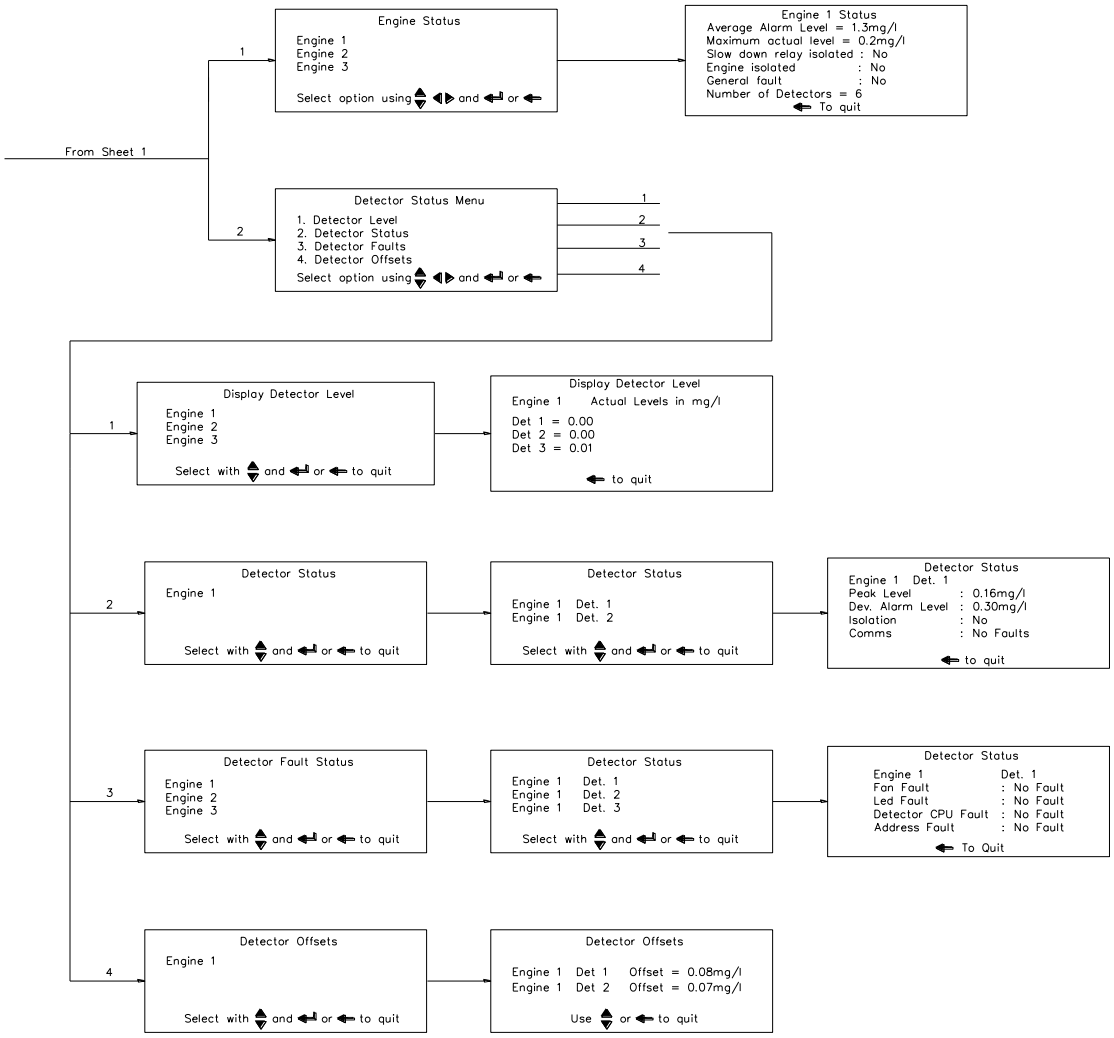

User Menu Sheet 3

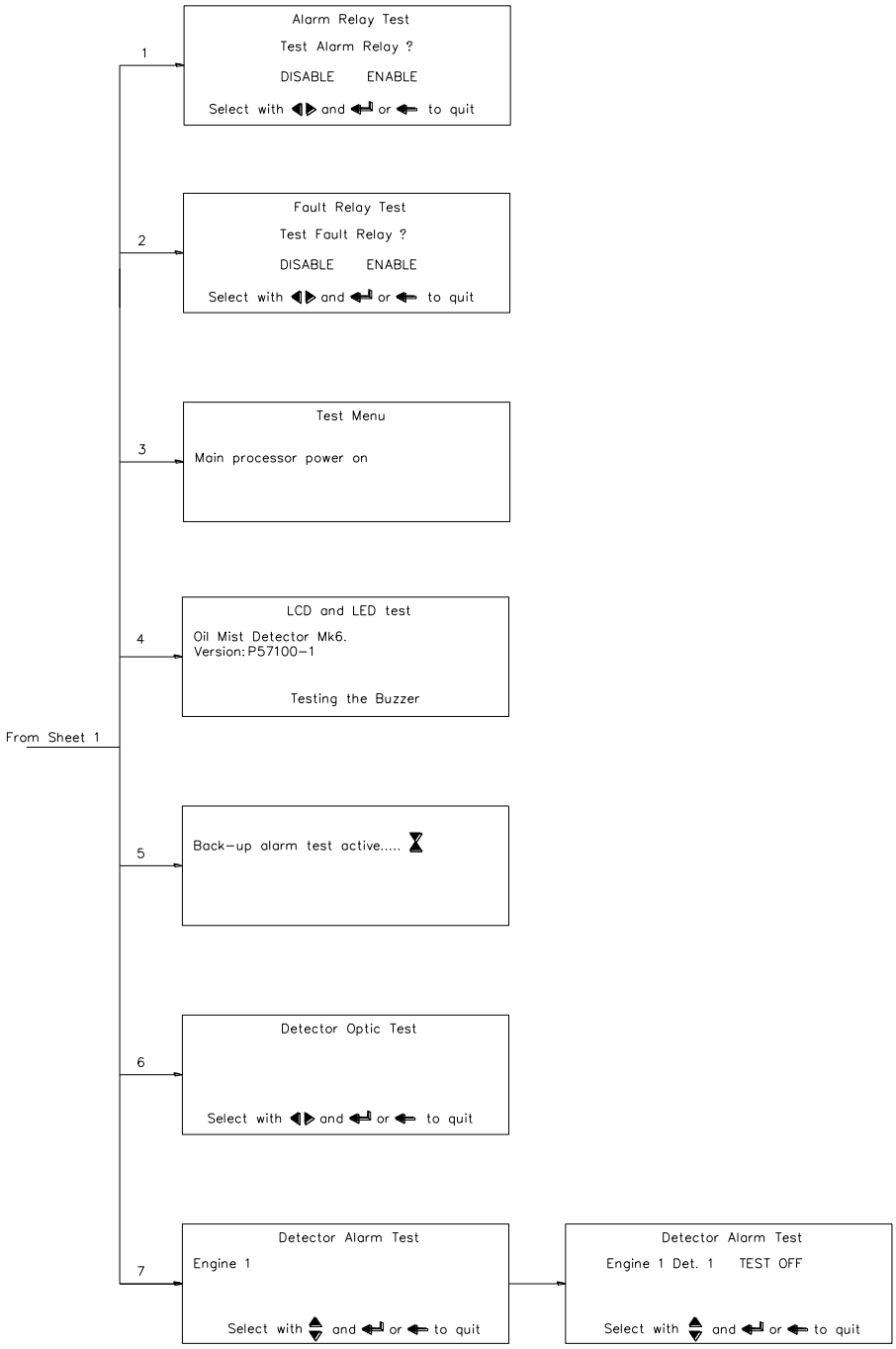

Chapter 3 MAINTENANCE

3.1 ROUTINE MAINTENANCE

Warning: Do not work on the system unless the power is switched off or isolated.

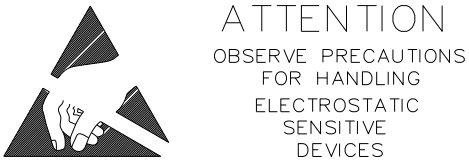

Caution: Ensure that antistatic handling procedures are observed where appropriate.

The following checks are recommended to be carried out every 6 months, with the system switched off. The checks should be carried out by competent personnel with suitable skill levels.

3.1.1 Control Unit

1. Ensure that all connectors are tight to prevent ingress of oil and moisture.
2. Check the sealing strip between the door and box is not damaged preventing a seal being made.

3.1.2 Junction Box

1. Ensure that all connectors are tight to prevent ingress of oil and moisture.
2. Ensure that the lid fixing screws are tight, to prevent ingress of oil and water

3.1.3 Cables

1. Ensure all connections to both the Control Unit and Junction Box(es) are tight.
2. Check all cables. Replace any that are found to be damaged.

3.1.4 Detectors

1. Ensure that the Detector base is screwed tight into the crankcase,
2. Remove the cable connector from the Detector and check for damage.
3. Remove the Detector head and clean following paragraph 3.3 Detector Head Refurbishment.

3.2 DETECTOR HEAD REPLACEMENT

Warning: Do not remove the Detector base from the crankcase whilst the engine is in operation. This operation should be carried out while the engine is stopped to avoid the possibility of hot oil coming out of the base fixing hole.

If an in-service Detector head is removed for any reason, the Detector optics must be cleaned before reassembling and replacing it.

3.2.1 To replace the Detector:

1. Switch off the system (if safe to do so) or isolate the Detector
2. Remove the cable connector fitted to the top of the Detector
3. Using a 4mm hexagonal key, loosen the two fixing screws in the assembly base.

Figure 50 Base Fixing Screw Removal

4. Lift out the Detector head and note its address.
5. Set the address on the new Detector head in accordance with para 2.1.4. The selected address must be the same as that of the Detector head that has been removed.
6. Fit the Detector head onto its base and tighten up the fixing screws. Affix the new switch window label.
7. Re-fit the cable to the Detector head.
8. If the system was switched off, switch back on and allow the system to initialise.
9. If isolated, then de-isolate, return to main display by pressing the **MAIN DISPLAY** keypad and press **RESET** Allow the system to initialise.

3.3 DETECTOR HEAD REFURBISHMENT

1. Isolate the Detector as described in paragraph 2.5.3 of this manual. If all Detectors on one engine are to be serviced, then isolate the engine as described in paragraph 2.5.3 of this manual.
2. Disconnect the cable from the top of the Detector unit and remove the unit from the engine casing (refer to Figure 51).

Figure 51 Cable Disconnect

3. Using a 4mm hexagon key, unscrew 2 off screws from the underside of the Detector head (refer to Figure 52). The screws are self-retaining.

Figure 52 Screw Removal

4. Remove and invert the top part of the Detector head. Examine the base moulding seal and replace if damaged or perished (refer to Figure 53).

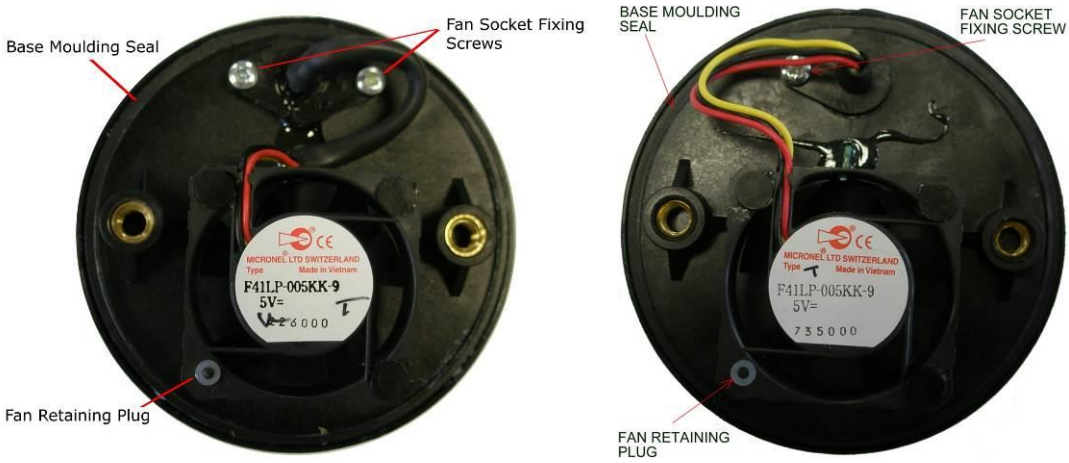

Figure 53 Base Moulding Seal

Caution: Do not press the fan, only handle the outer housing !!

5. Using the Pulling Tool (refer to Figure 54), remove the Fan Retaining Plug by capturing the shoulder and pulling. Carefully remove the Fan from its mountings (refer to Figure 55).

Figure 54 Pulling Tool

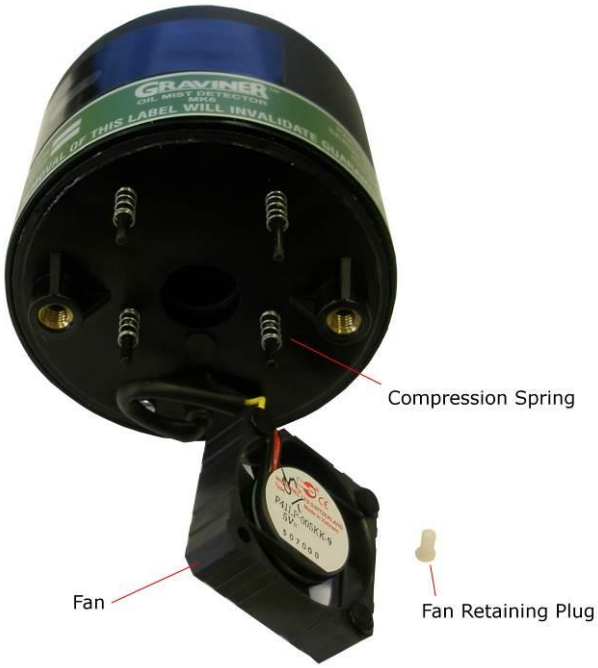

Figure 55 Fan Removal

6. Examine the 4 off compression springs and the fan retainer plug; replace any bent or damaged items from the spares.
7. Examine the fan for free running and clogging due to oil residues. If damaged, refer to paragraph 3.4 in this manual. Although not necessary for service cleaning, spares of the M3 screw and the fan connector seal are included in the kit.
8. Using a foam bud with glass cleaner applied, wipe carefully around the inside of the smoke detecting orifice and the end of the test LED (refer to Figure 56).

Figure 56 Cleaning Light Guide Removal

9. Dry the inside of the unit.
10. Examine the base body cavity and sampling tube, and wipe clean where necessary.
11. Reassemble the fan to the Detector using a fan retaining plug.

Caution: Do not press the fan, only handle the outer housing.

12. Reassemble the Detector head and base body. Replace the Detector and then de-isolate.
13. Repeat the procedure for all Detectors to be cleaned.

Refer to the Materials Safety Data Sheet in the event of health or safety issues.

3.4 FAN REPLACEMENT

Warning: Do not remove the Detector base from the crankcase whilst the engine is in operation. This operation should be carried out while the engine is stopped to avoid the possibility of hot oil coming out of the base fixing hole.

3.4.1 To replace the fan:

1. Switch off the system (if safe to do so), or isolate the associated Detector.
2. Remove the cable connector from the top of the Detector.

3. Using a 4mm Allen key, loosen the Detector fixing screws on the base.
4. Remove the Detector from its base and turn it upside down to reveal the fan.
5. Remove the fixing screw holding the fan socket to the mounting plate.
6. Using a pulling tool (Part Number 1-D9131-002 available with Service Kit

   Part No.1-D9221-027), remove the fan retaining plug holding the fan onto its mounting legs.
7. Lift the fan off of its mounting legs, ensuring the springs under the fan are not lost.

   Caution: Ensure a fan of the same make as that removed is fitted. If not, then a fan failure fault will occur. The correct fan can be selected by matching the Detector serial number suffix (M or P) to the fan type. i.e. Micronel or Papst. See spare parts list
8. Discard the failed fan and fit a replacement fan in reverse order of disassembly.

3.5 CABLE REPLACEMENT

If changing a Detector cable, isolating that Detector will be sufficient.

(see section 2.5.3 on isolation)

3.5.1 Detector Cable

1. Isolate the Detector with the damaged cable.
2. Remove the cable connector on top of the Detector.
3. Identify the cable to be removed at the Junction Box.
4. Unscrew the cable connector at the Junction Box. Discard the damaged cable.
5. Connect the replacement cable to the Junction Box connector ensuring it is screwed in place.
6. Connect the cable connector to the Detector
7. De-isolate the Detector, return to the main display and press the **RESET** switch and allow the system to initialise.

3.5.2 Junction Box Power Supply Cable Replacement

1. Switch off the system.
2. Disconnect the damaged power supply cable from the Control Unit.
3. Disconnect the damaged power supply cable from the Junction Box.
4. Connect the replacement power supply cable to the Control Unit ensuring wires and cable screen are correctly fitted in the terminals.
5. Connect the replacement power supply cable to the Junction Box ensuring wires and cable screen are correctly fitted in the terminals.
6. Switch the system on and allow to initialise.

3.5.3 Communications Cable Replacement

1. Switch off the system.
2. Disconnect the damaged communications cable from the Control Unit.
3. Disconnect the damaged communications cable from the Junction Box.

4. Connect the replacement communications cable to the Control Unit ensuring it is screwed in place.
5. Connect the replacement communications cable to the Junction Box ensuring it is screwed in place.
6. Switch the system on and allow it to initialise.

3.5.4 Junction Box Backup Alarm Cable Replacement

1. Switch off the system.
2. Disconnect the damaged relay cable from the Junction Box.
3. Disconnect the damaged relay cable from the monitoring equipment.
4. Connect the replacement relay cable to the Junction Box ensuring it is screwed in place.
5. Connect the replacement relay cable to the monitoring equipment.
6. Switch the system on and allow it to initialise.

3.5.5 Control Unit Engine Shutdown / Slowdown Alarm, Common Alarm or Fault Relay Cable Replacement

1. Switch off the system.
2. Disconnect the damaged relay cable from the Control Unit.
3. Disconnect the damaged relay cable from the monitoring equipment.
4. Connect the replacement relay cable to the Control Unit ensuring it is screwed in place.
5. Connect the replacement relay cable to the monitoring equipment.
6. Switch the system on and allow it to initialise.

3.6 CONTROL UNIT PCBS

3.6.1 Main Control Processor PCB - Part No. 1-44782-K071-02 (refer to Figure 57)

1. Switch off the system and replace the Main PCB as follows:
2. Remove all connectors, PLG1, PLG2, PLG4, PLG5, PLG8, PLG9 and PLG1O noting the orientation.
3. Remove 8 off fixing screws. Remove the PCB. Remember to follow antistatic precautions.
4. Fit the replacement PCB with the 8 off screws, re-fit all connectors.
5. Switch on system and allow it to initialise.
6. Re-program the system to the required configuration.

   Note: After changing the Processor PCB, it may be necessary to adjust gain control R2 to ensure the clarity of the LCD.

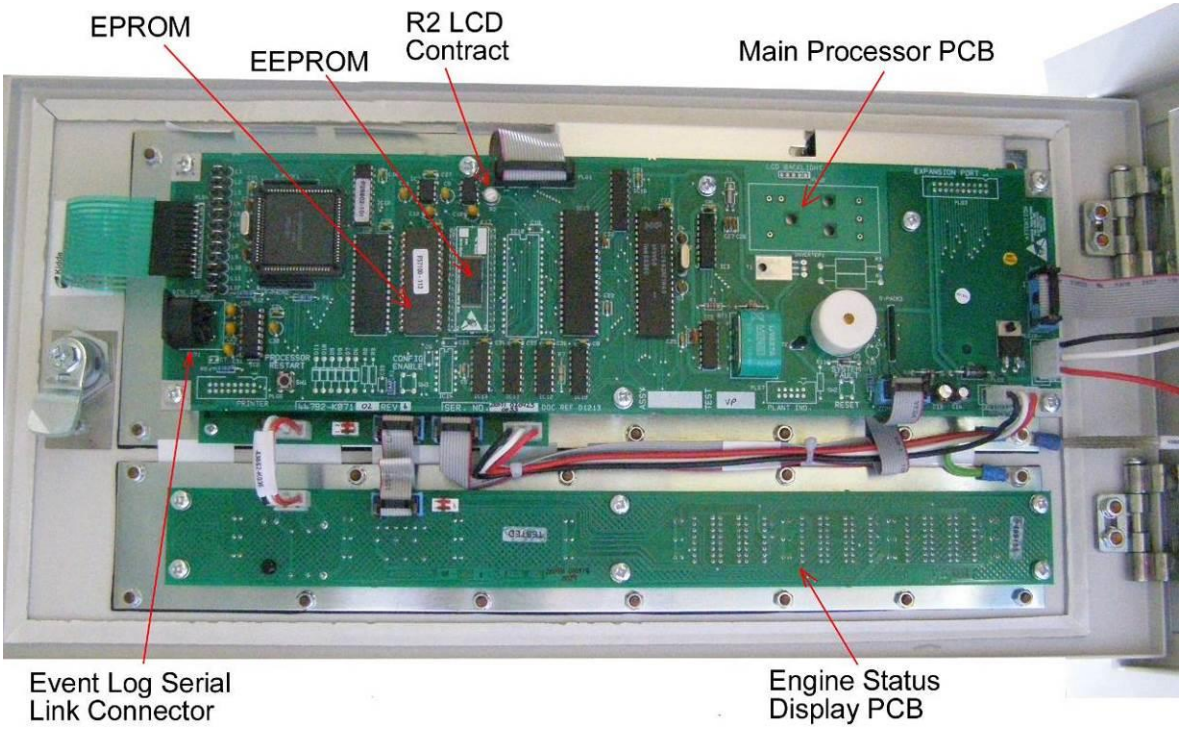

Figure 57 Control Unit PCB's

3.6.2 8 Engine Status Display PCB Replacement. Part No. 1-44782-K098 (refer to Figure 61)

1. Switch off the system and remove the 8 Engine Status Display PCB as follows:
2. Remove the two connectors located on the top left hand side of the board, noting the orientation.
3. Remove 6 off fixing screws and remove the PCB.
4. Fit the new PCB with the 6 off screws and replace the two connectors.
5. Switch the system on and allow to initialise.

3.6.3 Interface PCB Replacement. Part No. 1-44782-K183 (refer to Figure 58)

1. Switch off the system and replace the PCB as follows:
2. Remove all connecting wires noting their positions.
3. Remove 8 off retaining screws and remove the board.
4. Fit the replacement board in place with the 8 off screws.
5. Re-fit all connecting wires.
6. Switch the system back on and allow to initialise.

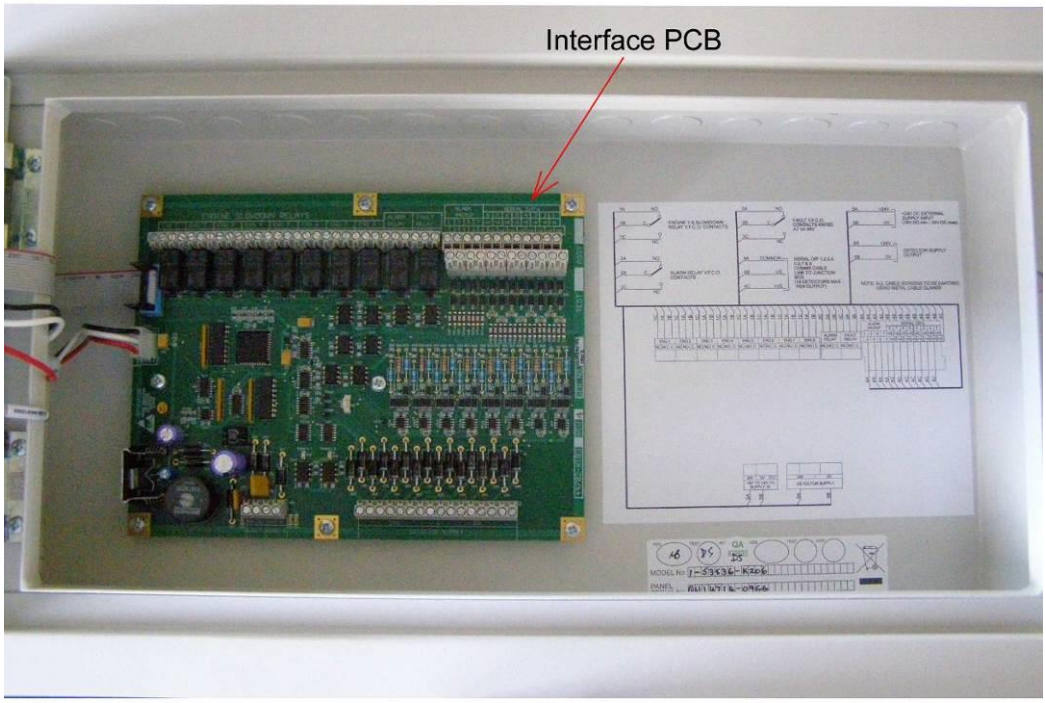

Figure 58 Control Unit PCB's

3.6.4 Status Display PCB Part No. 1-44782-K102-02 (Refer to Figure 62)

1. Switch off the system and remove the Status Display PCB as follows:
2. Remove the Main Control Processor PCB. (Refer to para 3.6.1)
3. Remove the connectors from the Status Display PCB, noting the orientation.
4. Remove the 4 off fixing screws and remove the PCB.
5. Fit the replacement PCB with the 4 off screws and re-fit the connectors.
6. Re-fit the Main Control Processor PCB.
7. Switch on the system and allow to initialise.

3.7 REPLACEMENT OF 8 ENGINE STATUS DISPLAY MEMBRANE

3.7.1 Replace the 8 Engine Status Display Membrane as follows:

1. Remove the 8 Engine Status Display PCB as above. (Refer to 3.6.2)
2. Remove the seven M4 nuts and washers holding the membrane to the door unit.
3. Remove the membrane.
4. Fit the replacement 8 Engine Status Display membrane in reverse order of disassembly.

3.8 REPLACEMENT OF LCD DISPLAY

3.8.1 Replace the LCD Display as follows:

1. Remove the Main Control Processor PCB as in 3.6.1.
2. Undo the 4 off M3 screws in the LCD cover

3. Gently lift up the cover and unplug the LCD connection cable and feed through the slot in the end of the cover
4. Undo and remove the 2 off studs on the left of the display and loosen the 2 off studs on the right of the display and then slide the LCD assembly out.
5. Refit in the reverse order of disassembly. Ensure the wires are not trapped when the cover is replaced.

3.9 REPLACEMENT OF FUNCTION KEY / LCD DISPLAY MEMBRANE

3.9.1 Replace the Function Key / LCD Display Membrane as follows:

1. Remove the LCD Display as above (Refer to 3.8)
2. Remove the membrane.
3. Refit the replacement Function Key / LCD Display membrane in the reverse order of disassembly.

3.10 REPLACEMENT OF JUNCTION BOX PCB

3.10.1 Junction Box PCB Replacement Part No. 1-44782-K184 (refer to Figure 63)

1. Switch off the system and remove the Junction Box PCB as follows:
2. Remove the lid from the Junction Box.
3. Disconnect all of the wires, noting their positions.
4. Remove the 4 off screws securing the board in the box and remove the board, noting the position of Detector 1.
5. Fit the new board ensuring that Detector 1 is in the same position on the new board as the removed board and secure with the 4 off screws.
6. Reconnect all the wires and replace the lid.
7. Switch the system on and allow to initialise.

3.11 DECOMMISSIONING

All the components of the Graviner MK6 OMD system may be disposed of as electrical/electronic equipment waste. i.e. using waste disposal methods in accordance with current local waste disposal regulations.

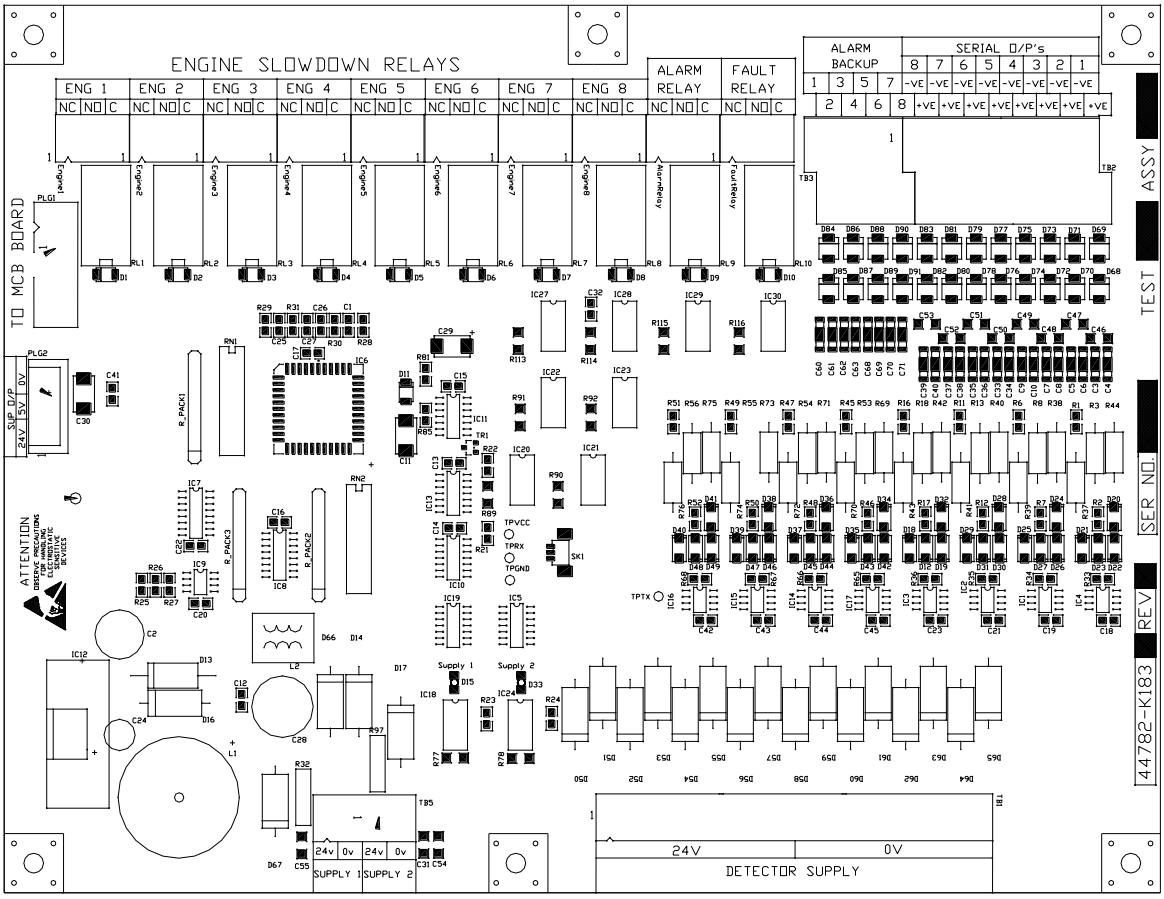

Figure 59 Interface PCB

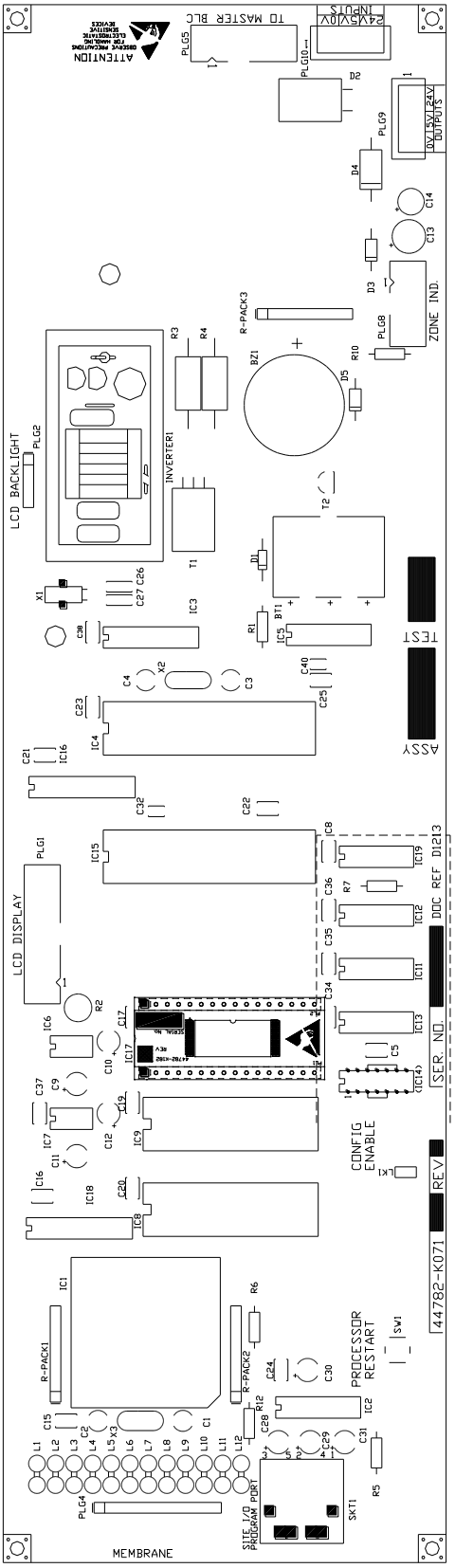

Figure 60 Main Control Processor PCB

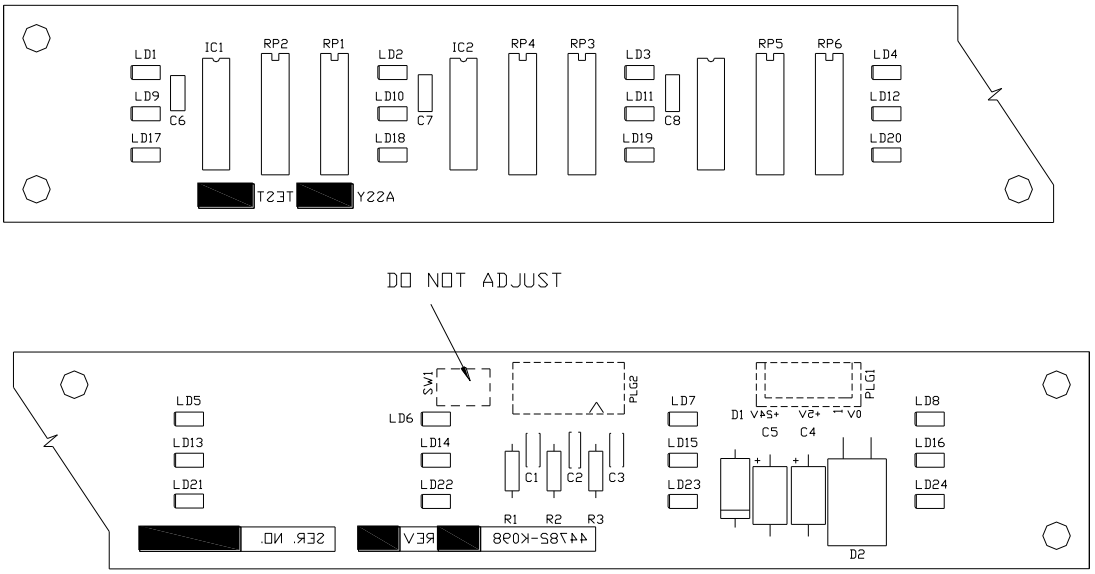

Figure 61 Eight Engine Status Display PCB

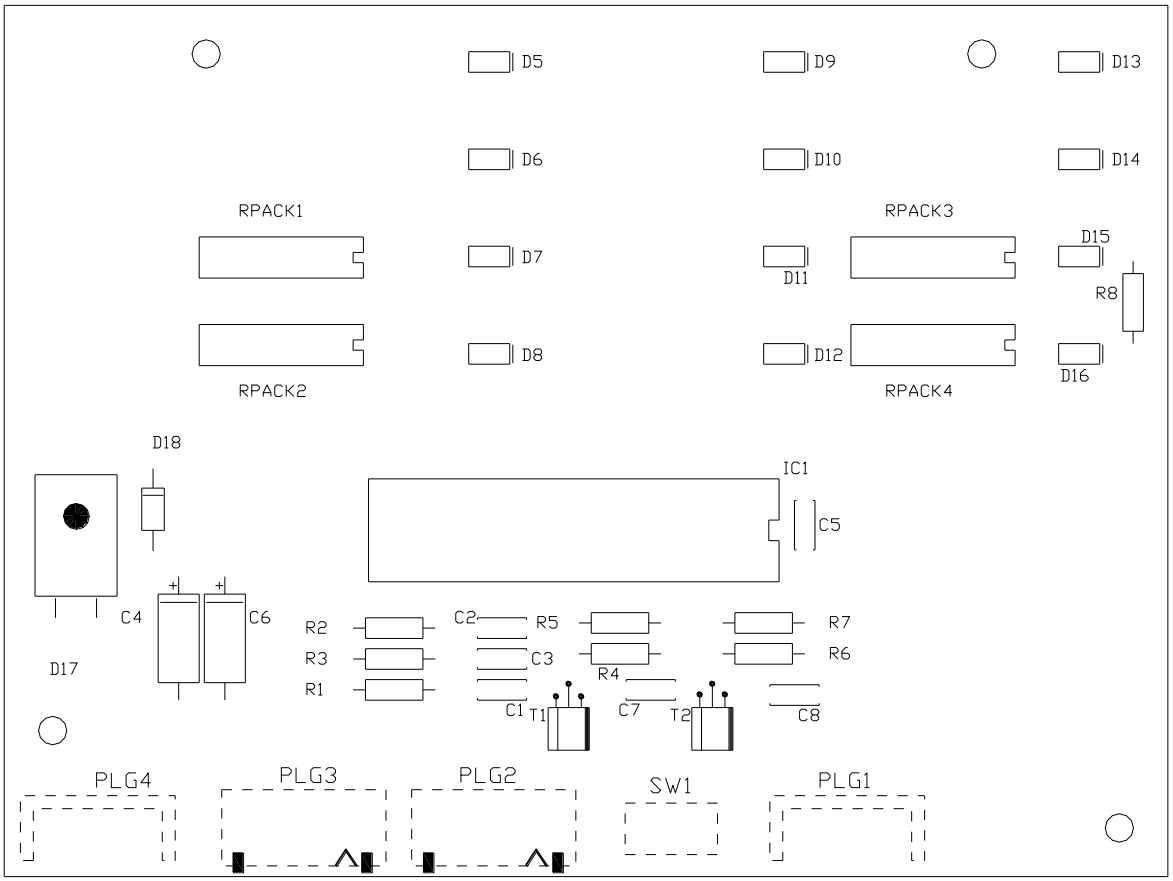

Figure 62 Status Display PCB

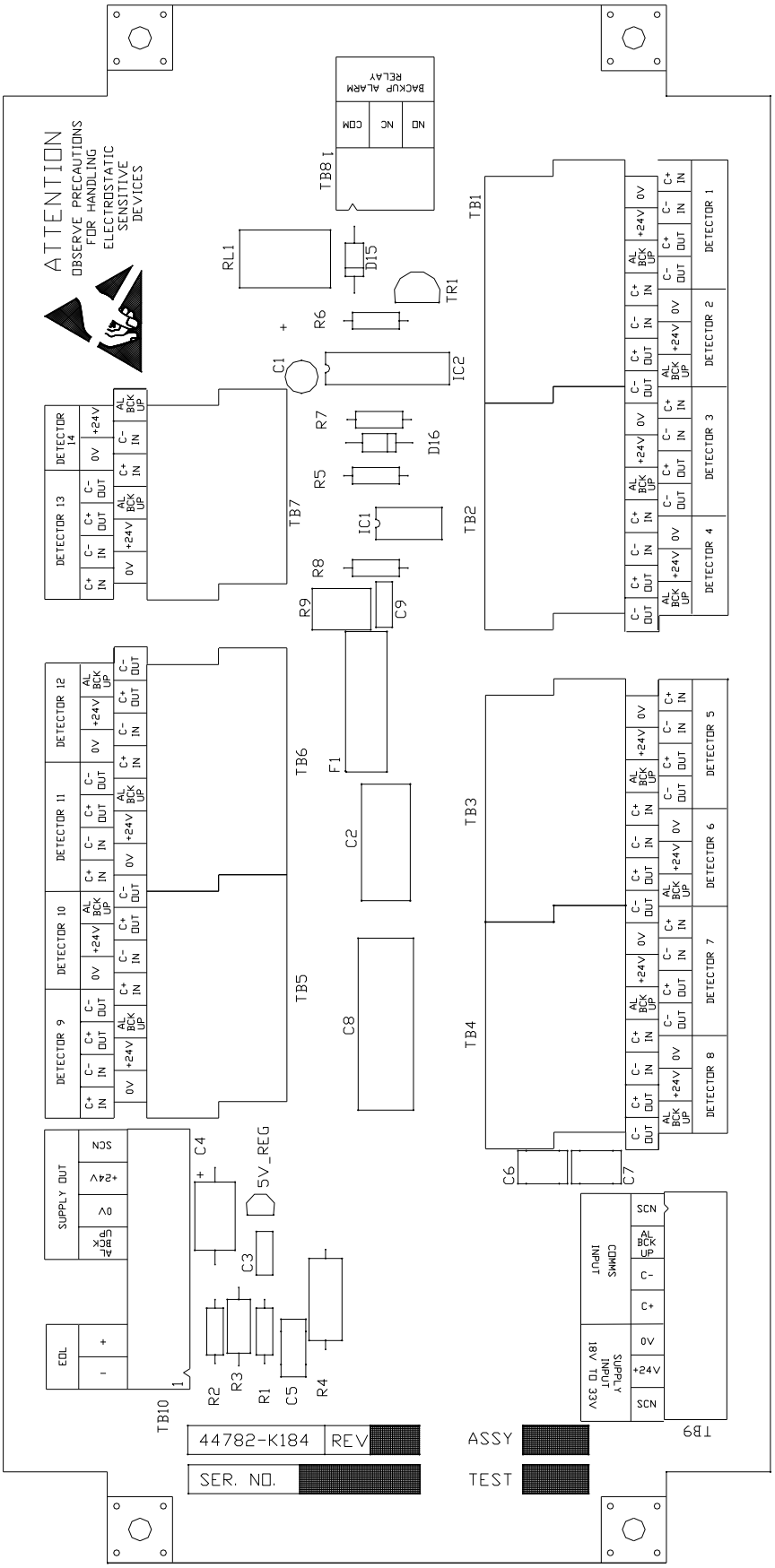

Figure 63 Junction Box PCB

Chapter 4 FAULT FINDING

4.1 GENERAL

The table below lists a series of failure modes and the likely faults that would be indicated should that failure mode appear. Also listed are Actions, numbered 1 to 19, which should be followed if the associated fault appears. On the following pages, Actions 1 to 19 are shown as flow charts which will assist with fault finding on the Graviner Mk.6 OMD system

Failure Mode	Fault Indication	Fault	Action
Control Unit Power indicator is off and the display is blank	No panel display	Supply Failure	1.
The Detector Power On (Green) indicator(s) are OFF on one engine	Comms Fault	Junction Box fuse. Faulty Detector. Power connection between Junction Box and Control Unit damaged	2.
The display shows COMMS FAULT e.g. Engine 1 det 3	Comms Fault	Incorrect Detector address setting. Missing Detector Supply. Faulty Detector. Incorrect Wiring Damaged Junction Box PCB	3.
Display shows several COMMS FAULTs, e.g. Engine 1 det 10, Engine 1 det 11, Engine 1 det 12, Engine 1 det 13	Comms Fault	Junction Box EOL not connected. Damaged Junction Box PCB Faulty wiring	4.
The display shows FAN FAULT e.g. Engine 2 det 3	Fan Fault	Fan Failure	5.
The display shows LED fault e.g. Engine 3 det 1	LED Fault	Detector circular cavity needs to be cleaned. Failed LED.	6.
The display shows Detector Fault e.g. Engine 4 det 2	Detector Fault	Blocked Detector aperture. Damaged test LED. Faulty Detector.	7.
The system is showing many faults such as Detector faults and communications faults on several Detectors	Detector Fault / Comms Fault	One or more incorrectly addressed Detectors	8.
Back-up Alarm Fault	Backup Fault	The back-up signal was not received at the Control Unit	9.

		during a back-up alarm test.	
CPU Fault	Detector CPU Fault	Damaged Detector	10.
Replace EEPROM	Replace EEPROM	EEPROM is reaching the end of its guaranteed life.	11.
False Deviation Alarm	Deviation Alarm	Incorrect deviation alarm setting	12.
Display shows PSU FAULT	PSU Fault	One of the power supply inputs has failed.	13.
No Detectors Detected On power up a comms fault is indicated for all Detectors	Comms Fault	No Detectors connected. Failure of panel Interface Card	14.
Configuration data fault	CFG Data Fault	A failure of the configuration memory has been detected in the control panel	15.
EPROM checksum failure	EPROM Checksum Fault	The control panel software has been corrupted	16.
Shutdown / slowdown relay fault e.g. Engine 1 Relay Fault	Engine Relay Fault	The coil of a shutdown / slowdown relay has failed	17.
Common alarm relay fault	Main Alarm Relay Fault	The coil of the common alarm relay has failed	18.
System Fault	System Fault LED illuminated on the control panel	The control panel software has failed. The control panel microcontroller is not operating correctly	19.

ACTION 1

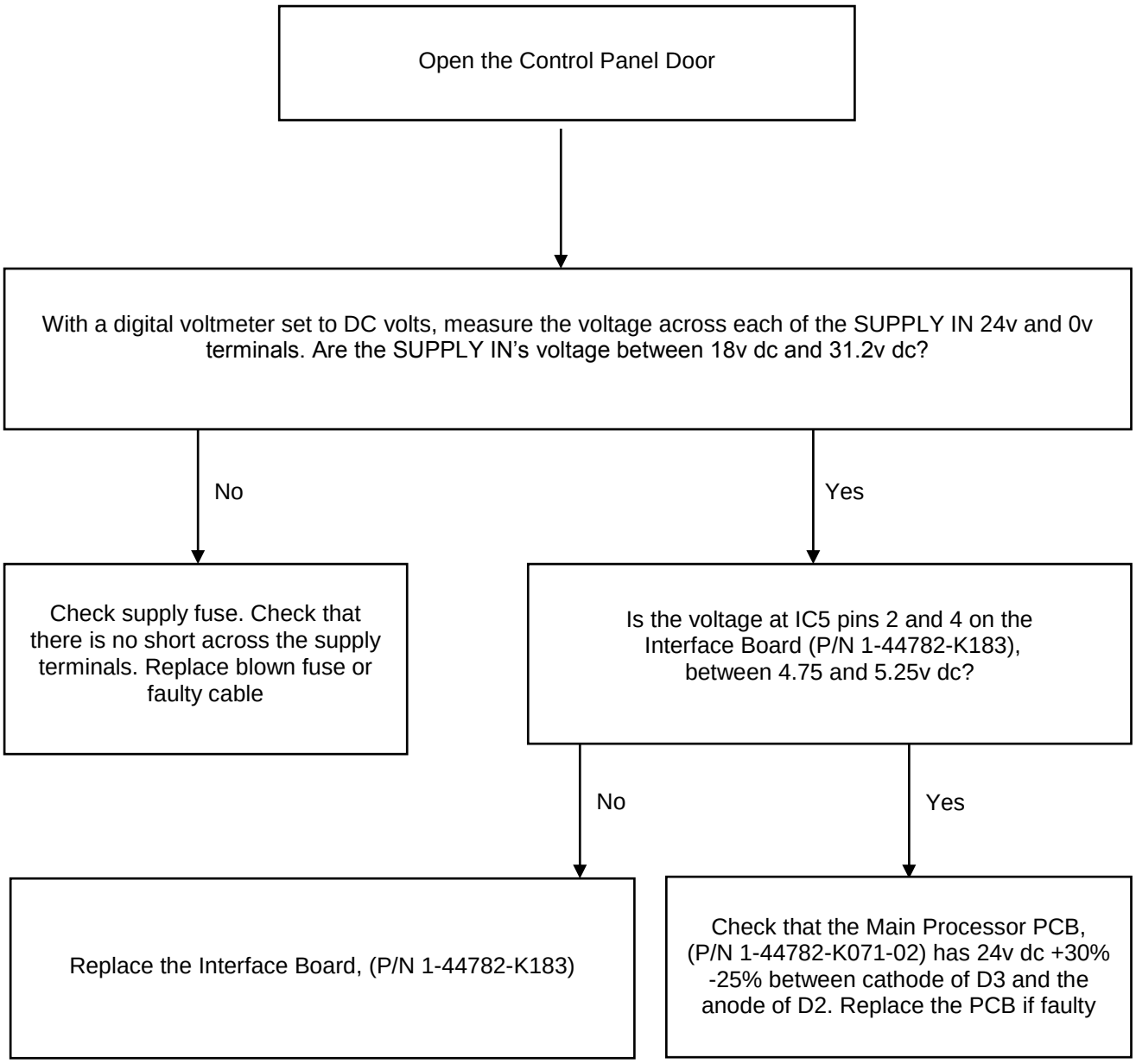
Open the Control Panel Door
With a digital voltmeter set to DC volts, measure the voltage across each of the SUPPLY IN 24v and 0v terminals. Are the SUPPLY IN's voltage between 18v dc and 31.2v dc?
No
Yes
Check supply fuse. Check that there is no short across the supply terminals. Replace blown fuse or faulty cable
Is the voltage at IC5 pins 2 and 4 on the Interface Board (P/N 1-44782-K183), between 4.75 and 5.25v dc?
No
Yes
Replace the Interface Board, (P/N 1-44782-K183)
Check that the Main Processor PCB, (P/N 1-44782-K071-02) has 24v dc +30% -25% between cathode of D3 and the anode of D2. Replace the PCB if faulty

ACTION 2

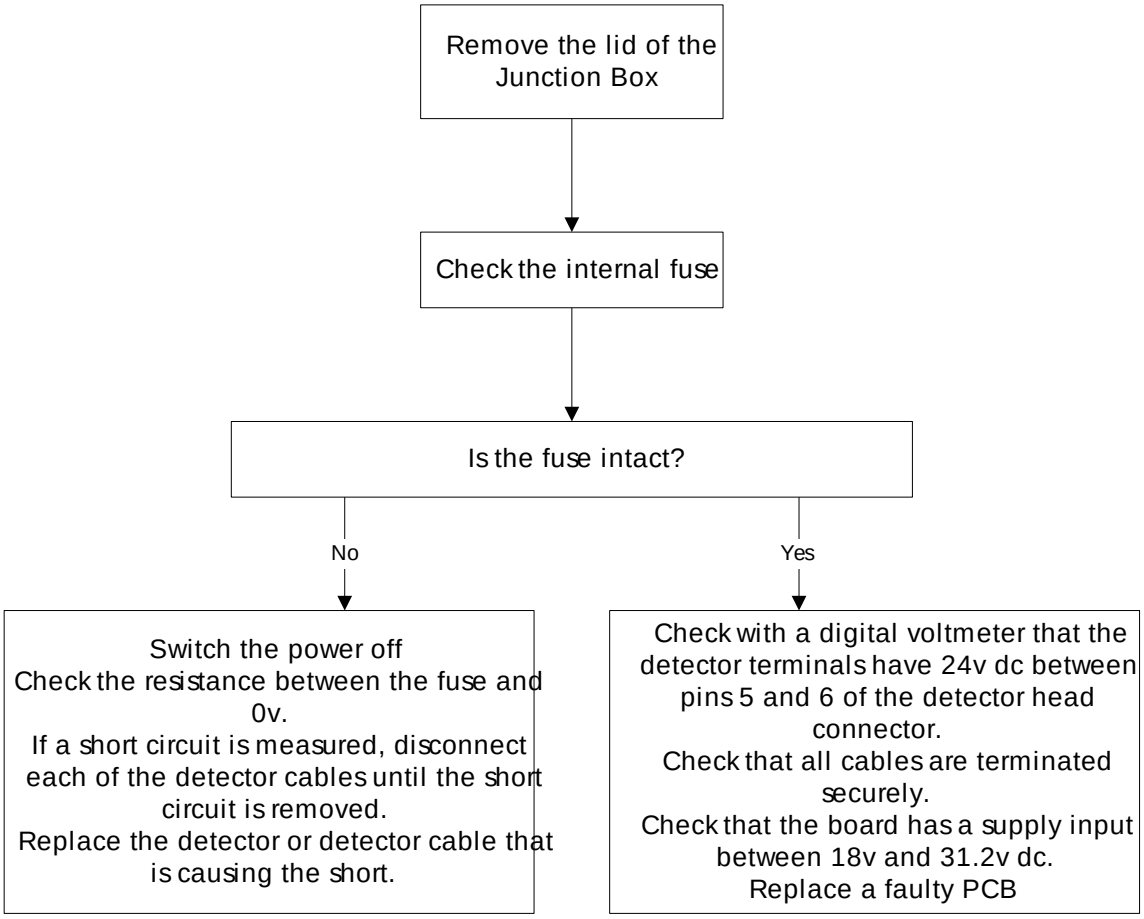
Remove the lid of the Junction Box
Check the internal fuse
Is the fuse intact?
No
Yes
Switch the power off
Check the resistance between the fuse and 0v.
If a short circuit is measured, disconnect each of the detector cables until the short circuit is removed.
Replace the detector or detector cable that is causing the short.
Check with a digital voltmeter that the detector terminals have 24v dc between pins 5 and 6 of the detector head connector.
Check that all cables are terminated securely.
Check that the board has a supply input between 18v and 31.2v dc.
Replace a faulty PCB

ACTION 3

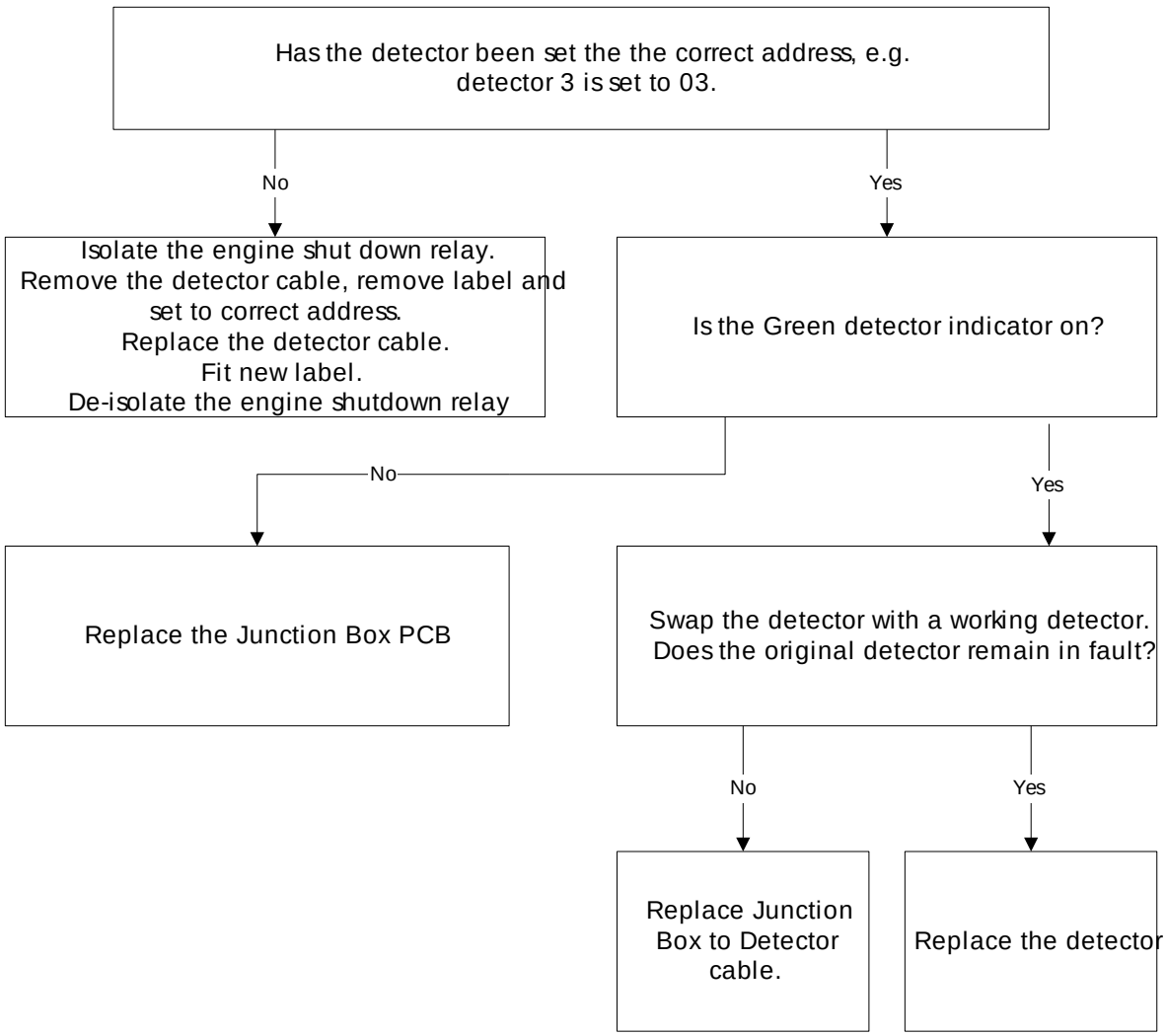
Has the detector been set the the correct address, e.g. detector 3 is set to 03.
No
Yes
Isolate the engine shut down relay. Remove the detector cable, remove label and set to correct address. Replace the detector cable. Fit new label. De-isolate the engine shutdown relay
Is the Green detector indicator on?
No
Yes
Replace the Junction Box PCB
Swap the detector with a working detector. Does the original detector remain in fault?
No
Yes
Replace Junction Box to Detector cable.
Replace the detector

ACTION 4

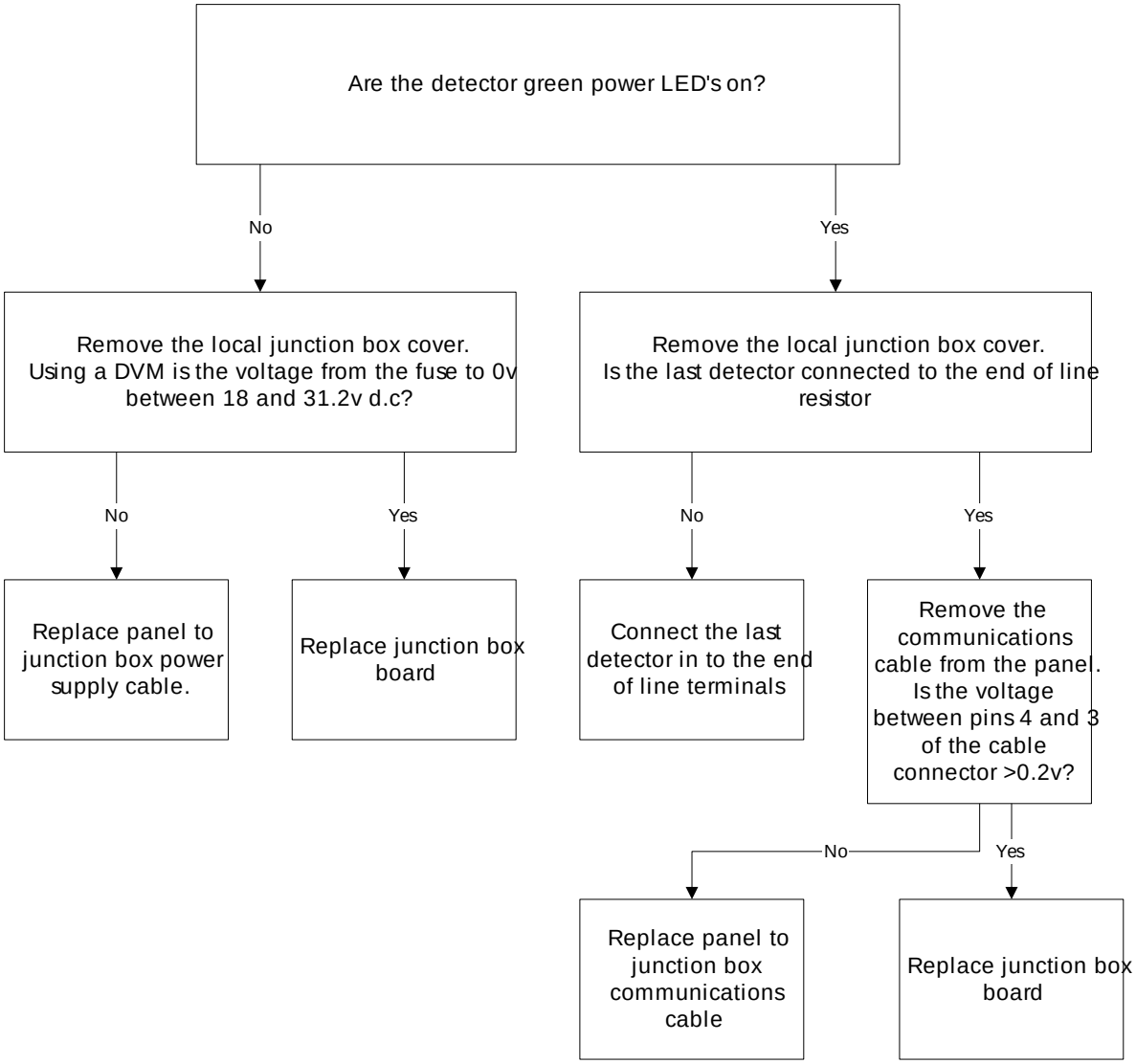
Are the detector green power LED's on?
No
Yes
Remove the local junction box cover.
Using a DVM is the voltage from the fuse to 0v between 18 and 31.2v d.c?
Remove the local junction box cover.
Is the last detector connected to the end of line resistor
No
Yes
No
Yes
Replace panel to junction box power supply cable.
Replace junction box board
Connect the last detector in to the end of line terminals
Remove the communications cable from the panel.
Is the voltage between pins 4 and 3 of the cable connector >0.2v?
No
Yes
Replace panel to junction box communications cable
Replace junction box board

ACTION 5

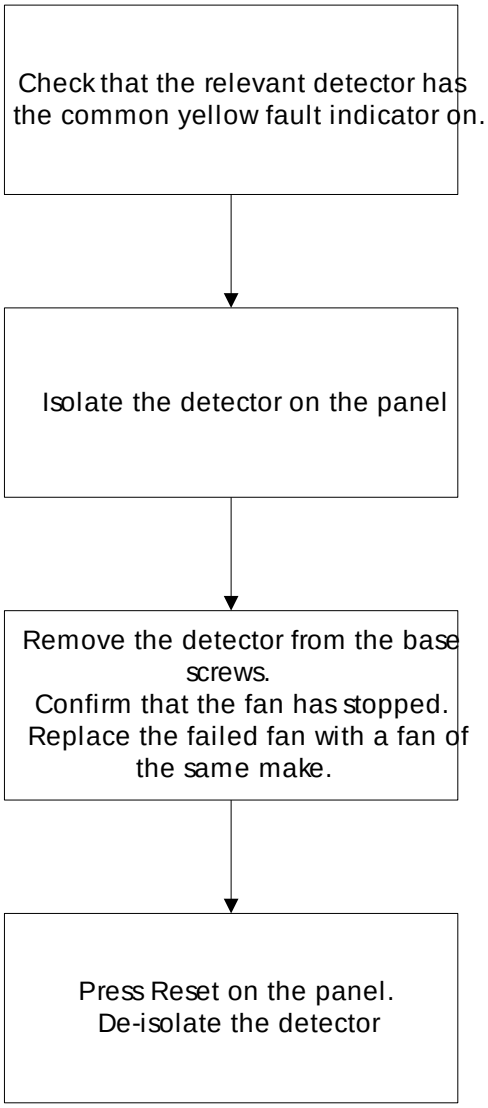
Check that the relevant detector has the common yellow fault indicator on.
Isolate the detector on the panel
Remove the detector from the base screws.
Confirm that the fan has stopped.
Replace the failed fan with a fan of the same make.
Press Reset on the panel.
De-isolate the detector

ACTION 6

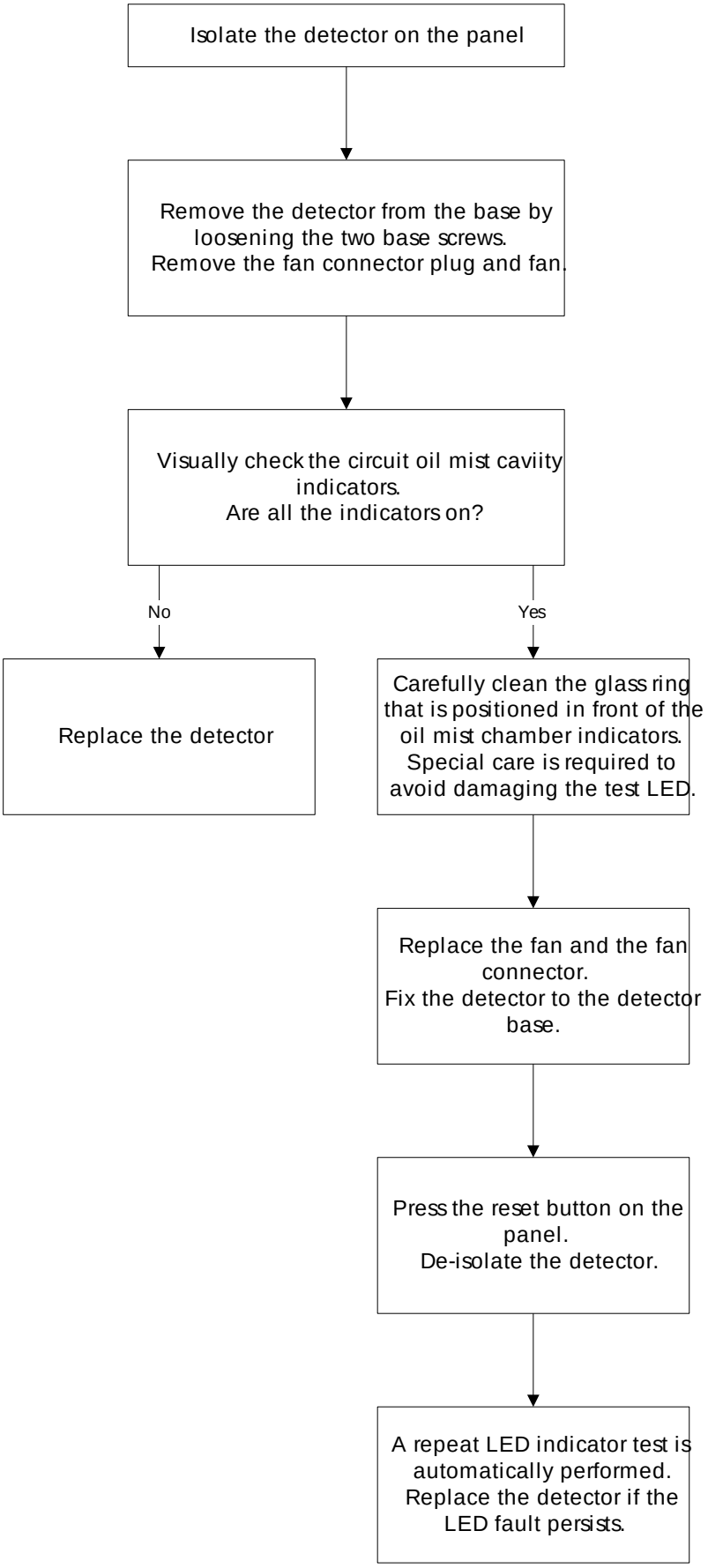
Isolate the detector on the panel
Remove the detector from the base by loosening the two base screws.
Remove the fan connector plug and fan.
Visually check the circuit oil mist caviity indicators.
Are all the indicators on?
No
Yes
Replace the detector
Carefully clean the glass ring that is positioned in front of the oil mist chamber indicators.
Special care is required to avoid damaging the test LED.
Replace the fan and the fan connector.
Fix the detector to the detector base.
Press the reset button on the panel.
De-isolate the detector.
A repeat LED indicator test is automatically performed.
Replace the detector if the LED fault persists.

ACTION 7

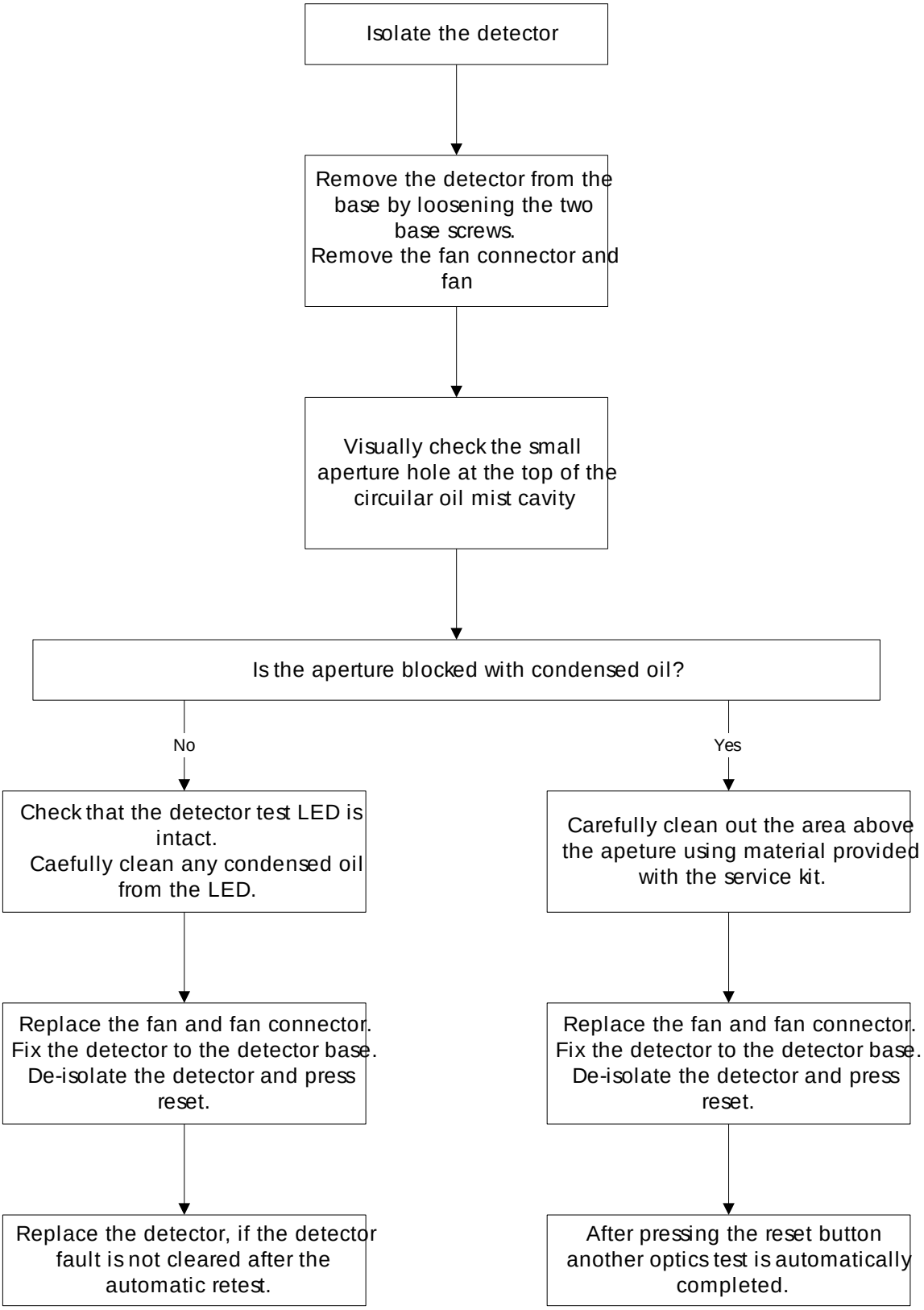
Isolate the detector
Remove the detector from the base by loosening the two base screws.
Remove the fan connector and fan
Visually check the small aperture hole at the top of the circuilar oil mist cavity
Is the aperture blocked with condensed oil?
No
Yes
Check that the detector test LED is intact.
Caefully clean any condensed oil from the LED.
Carefully clean out the area above the apeture using material provided with the service kit.
Replace the fan and fan connector.
Fix the detector to the detector base.
De-isolate the detector and press reset.
Replace the fan and fan connector.
Fix the detector to the detector base.
De-isolate the detector and press reset.
Replace the detector, if the detector fault is not cleared after the automatic retest.
After pressing the reset button another optics test is automatically completed.

ACTION 8

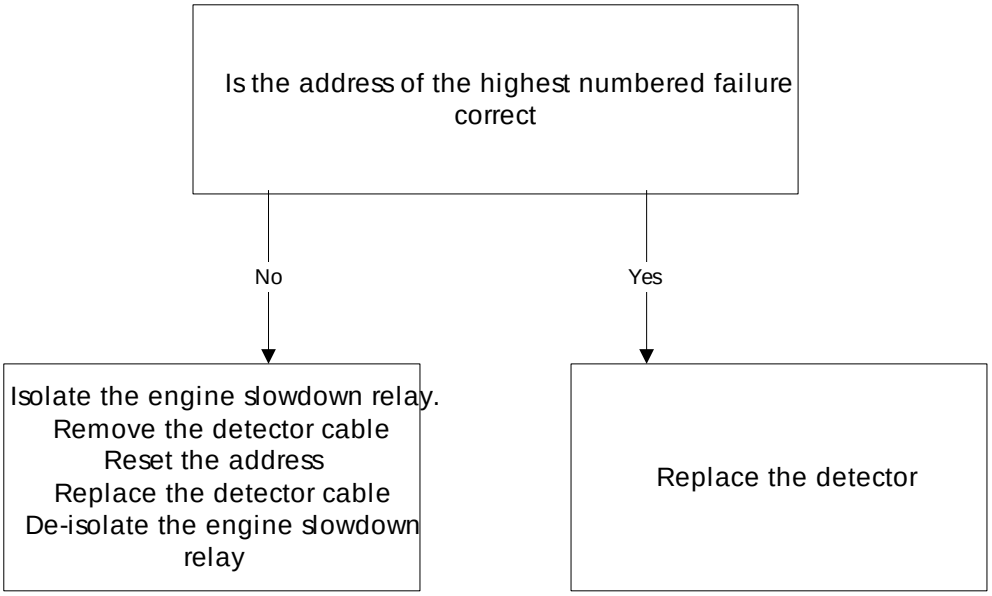
Is the address of the highest numbered failure correct
No
Yes
Isolate the engine slowdown relay.
Remove the detector cable
Reset the address
Replace the detector cable
De-isolate the engine slowdown relay
Replace the detector

ACTION 9

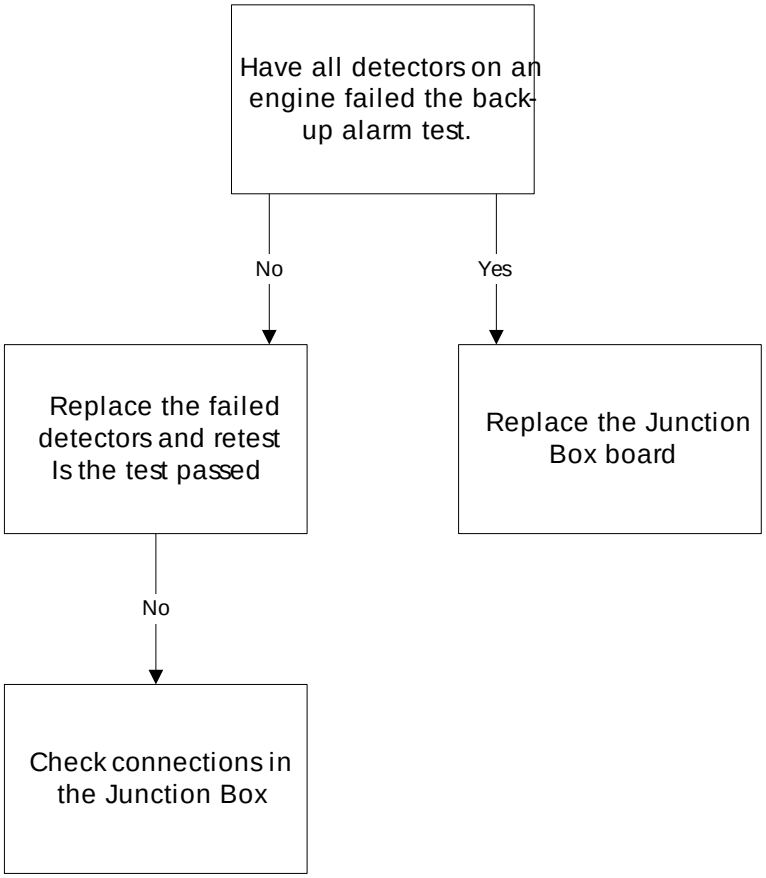
Have all detectors on an engine failed the back-up alarm test.
No
Yes
Replace the failed detectors and retest Is the test passed
Replace the Junction Box board
No
Check connections in the Junction Box

ACTION 10

Replace detector

ACTION 11

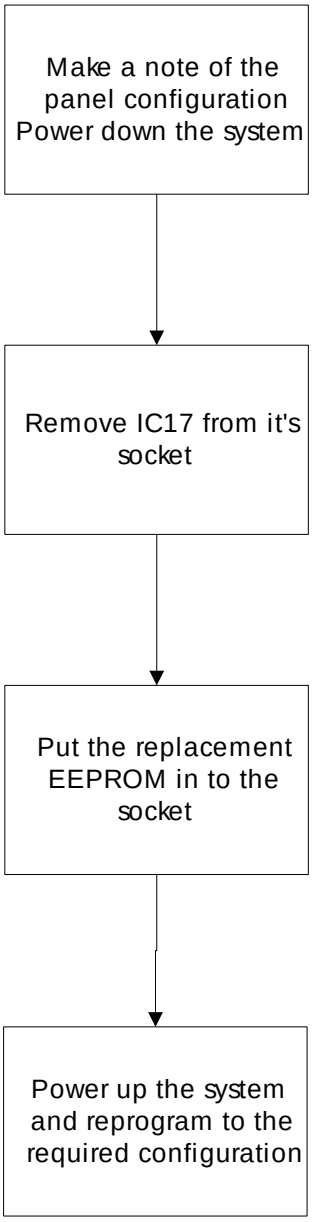
Make a note of the panel configuration Power down the system
Remove IC17 from it's socket
Put the replacement EEPROM in to the socket
Power up the system and reprogram to the required configuration

ACTION 12

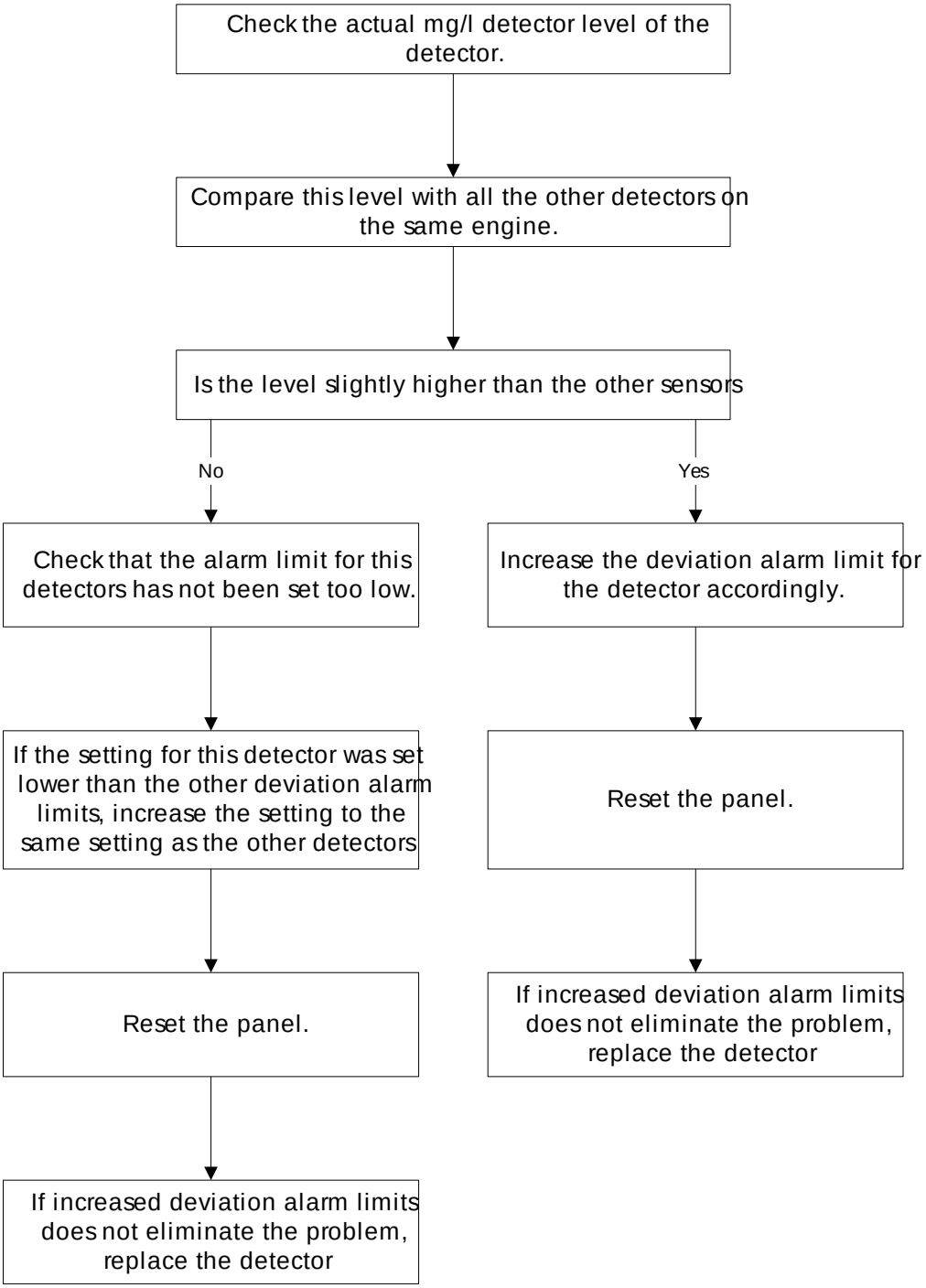
Check the actual mg/l detector level of the detector.
Compare this level with all the other detectors on the same engine.
Is the level slightly higher than the other sensors
No
Yes
Check that the alarm limit for this detectors has not been set too low.
If the setting for this detector was set lower than the other deviation alarm limits, increase the setting to the same setting as the other detectors
Reset the panel.
If increased deviation alarm limits does not eliminate the problem, replace the detector
Increase the deviation alarm limit for the detector accordingly.
Reset the panel.
If increased deviation alarm limits does not eliminate the problem, replace the detector

ACTION 13

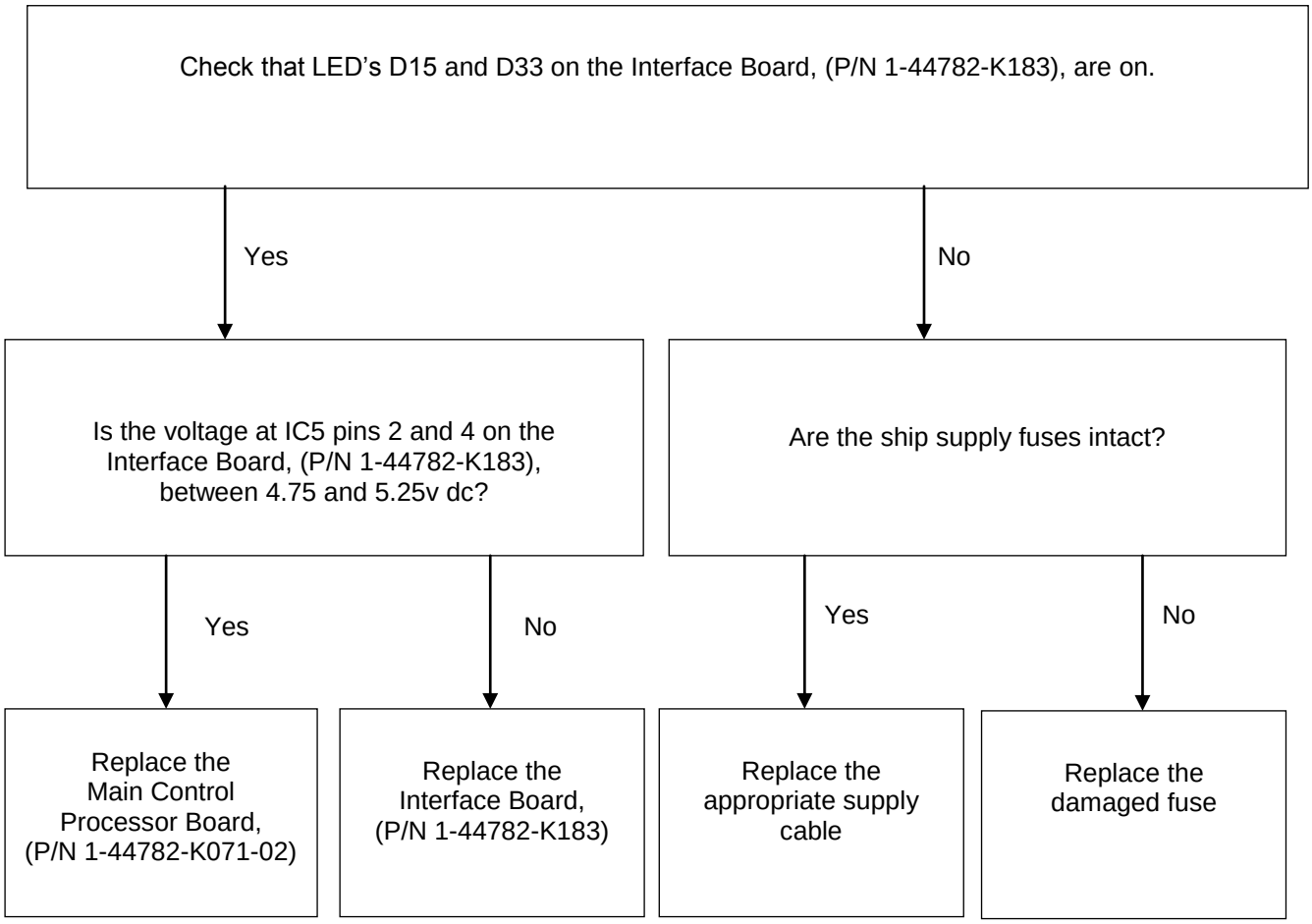
Check that LED's D15 and D33 on the Interface Board, (P/N 1-44782-K183), are on.
Yes
No
Is the voltage at IC5 pins 2 and 4 on the Interface Board, (P/N 1-44782-K183), between 4.75 and 5.25v dc?
Are the ship supply fuses intact?
Yes
No
Yes
No
Replace the Main Control Processor Board, (P/N 1-44782-K071-02)
Replace the Interface Board, (P/N 1-44782-K183)
Replace the appropriate supply cable
Replace the damaged fuse

ACTION 14

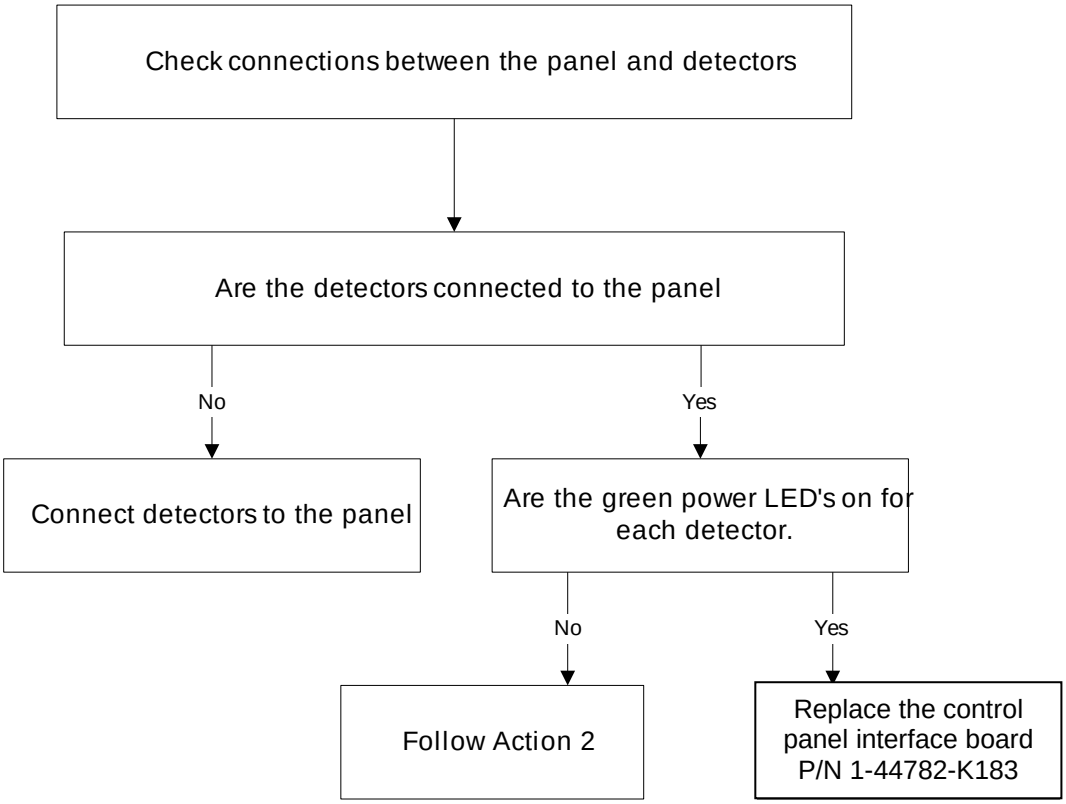
Check connections between the panel and detectors
Are the detectors connected to the panel
No
Yes
Connect detectors to the panel
Are the green power LED's on for each detector.
No
Yes
Follow Action 2
Replace the control panel interface board P/N 1-44782-K183

ACTION 15

Replace Control Panel
Main Processor Board
(P/N 1-44782-K071-02)

ACTION 16

Replace Control Panel
Main Processor Board
(P/N 1-44782-K071-02)

ACTION 17

Replace Control Panel
Interface Board
(P/N 1-44782-K183)

ACTION 18

Replace Control Panel
Interface Board
(P/N 1-44782-K183)

ACTION 19

Replace Control Panel
Main Processor Board
(P/N 1-44782-K071-02)

Chapter 5 SPARE PARTS

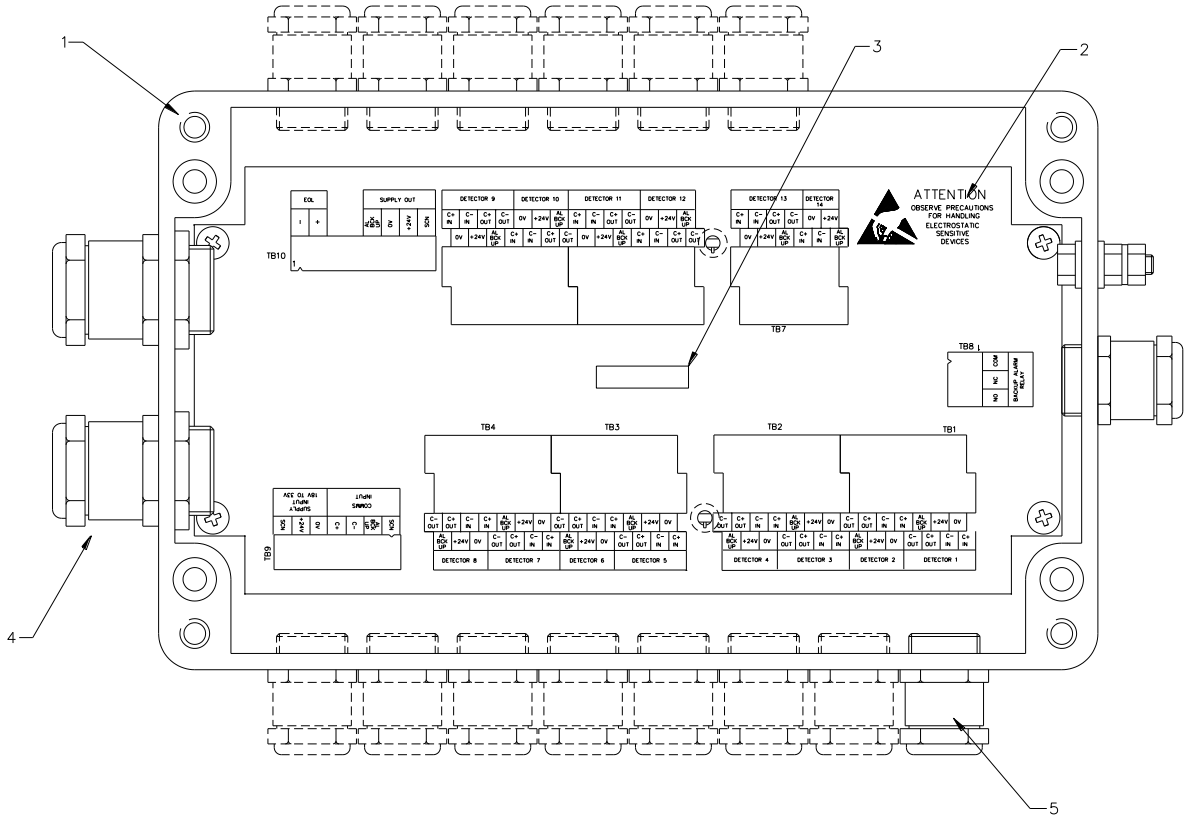

Figure 64 Junction Box Assembly – Part Number 1-D4720-001-XX

Item	Description	Part No.
1.	Junction Box	1-35100-K249
2.	Printed Circuit Board	1-44782-K184
3.	Fuse 4 amp, 20mm Slow Blow	1-27411-K001
4.	Nylon Gland M20 Nylon Gland M25	1-B5151-013 1-21888-K042
5.	Metal Gland	1-22540-K017
6.	Blanking screw	1-22540-K019

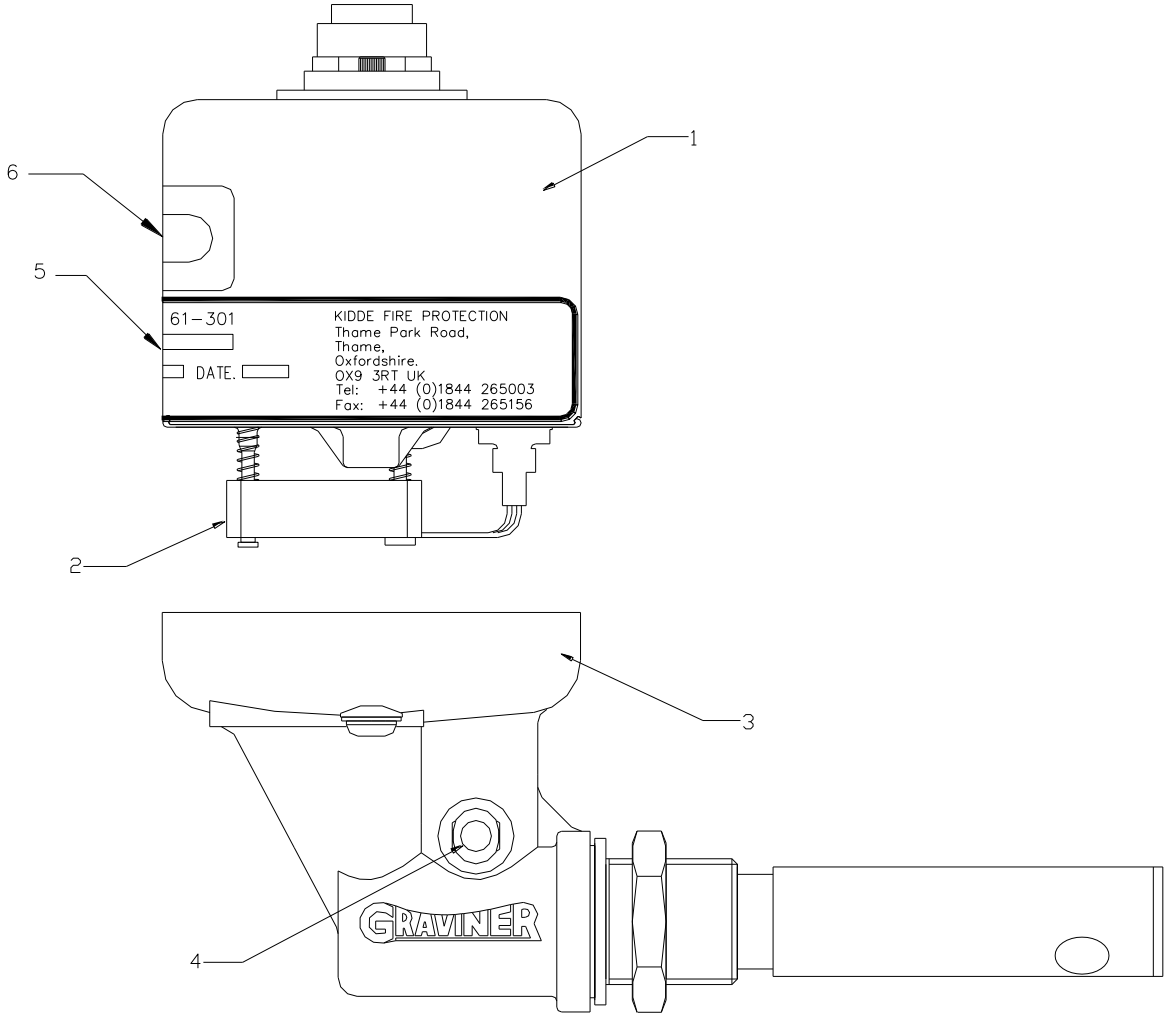

Figure 65 Detector Head - Part Number 1-E3561-301

Item	Description	Part No.
1	Detector Head Assembly	1-D5622-001
2	Fan Assembly (Micronel)	1-D5622-005-02
3	Base Unit sub-Assembly	1-D5622-101
4	Connector Push In	1-2888-K073
5	Label Invalidate Guarantee	1-C9175-803
6	Label Switch Window	1-C9189-801

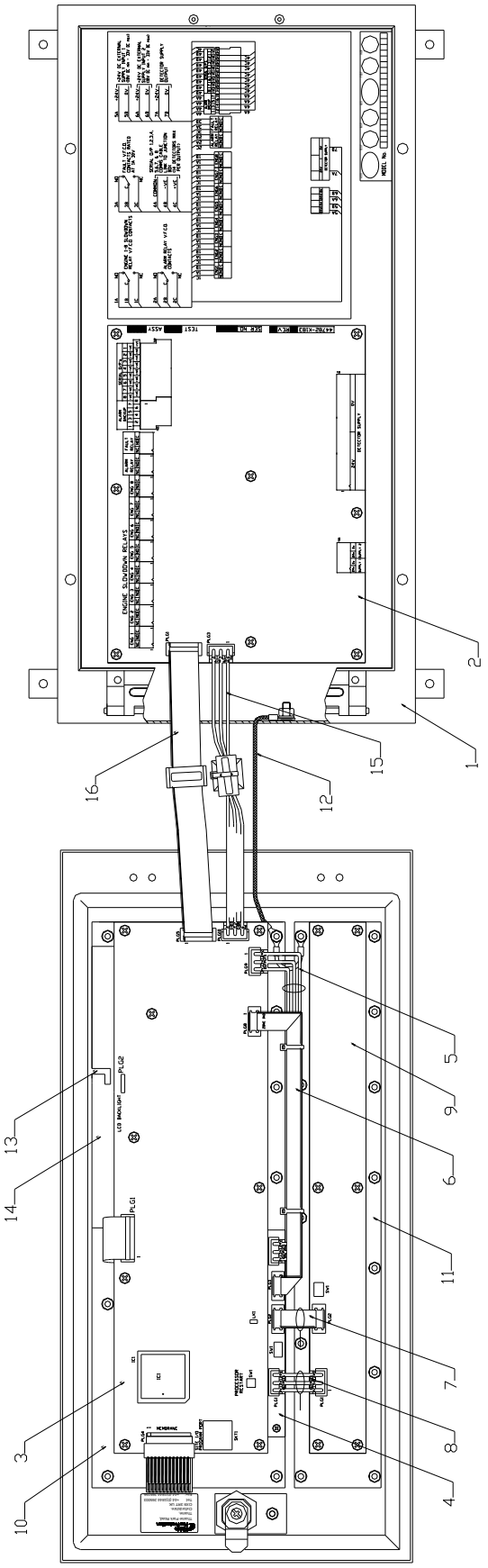

Figure 66 Graviner MK6 OMD Control Unit

Item	Description	Part No.	Qty
1.	Metal Enclosure	1-43782-K161	1
2.	PCB, 0MD6 Interface	1-44782-K183	1
3.	PCB, Main Processor	1-44782-K071-02	1
4.	PCB Status Display	1-44782-K102-02	1
5.	Harness, MCP-Status Display PSU	1-43682-K067	1
6.	Harness, MCP-Status Display	1-43682-K066	1
7.	Harness, MCP-Status	1-43682-K030	1
8.	Harness, MCP-Status PSU	1-43682-K036	1
9.	PCB, 8 Engine Display	1-44782-K098	1
10.	Membrane Function Key / LCD Display	1-39155-K047	1
11.	Membrane Status Display	1-39155-K048	1
12.	Earth Cable	1-43682-K050	1
13.	LCD Display	1-43782-K120	1
14.	LCD Cover	1-15100-K091	1
15.	Harness, PCB-MBLC PSU	1-43682-K261	1
16.	Harness, PCB-MBLC	1-43682-K032	1

Spares Kit (Straight Cable Connector) 1-53569-K001 consists of:		
Description	**Part No.**	**Qty**
Interface Board	1-44782-K183	1
Main Processor Board	1-44782-K071-02	1
Detector Head Assembly	1-D5622-001	1
Switch Window Label	1-C9189-801	2
Cable, 25 metres	1-43682-K108-08	1

Spares Kit (90 Degrees Cable Connector) 1-53569-K002 consists of:		
Description	**Part No.**	**Qty**
Interface Board	1-44782-K183	1
Main Processor Board	1-44782-K071-02	1
Detector Head Assembly	1-1-D5622-001	1
Switch Window Label	1-C9189-801	2
Cable, 25 meters	1-43682-K109-08	1

Commissioning Kit - Part Number 1-D9221-026 consists of:			
Description	**Part No.**	**Qty**	**Category**
Wipes, Wet & Dry	1-A7311-001	2	Consumables
Smoke Test Oil - 30 ml	1-D9221-028	1 Bottle	Consumables
Wick - 150 mm	1-17100-H06	3	Consumables
Smoke Tester	1-D9221-029	1	Tools
Materials Safety Data Sheet	-	2	Information

Service Kit – Part Number 1-D9221-027 consists of:			
Description	**Part No**	**Qty**	**Category**
Fan Retainer	1-B3741-902	5	Spares
Compression Spring	1-B3721-006	5	Spares
Base Moulding Seal	1-C1513-802	5	Spares
Fan Connector Seal	1-C1413-801	5	Spares
M3 Screw	1-21833-H01	5	Spares
Glass Cleaner 250ml	1-A7311-002	1	Consumables
Foam Buds Pkts	1-B6910-217	2	Consumables
4mm Hexagon Key	1-B6910-219	2	Tools
Pulling Tool	1-D9131-002	1	Tools
Materials Safety Data Sheet	-	2	Information

Recommended Operational Spares		
Description	**Part No.**	**Qty**
Spares Kit	1-53569-K001 or 1-53569-K002	1
Commissioning Kit	1-D9221-026	1
Service Kit	1-D9221-027	1
For systems with more than 14 Detectors, it is recommended that additional Detector head assemblies (Part Number 1-D5622-001) are supplied.		